STR-D711/D911

SERVICE MANUAL

US Model
Canadian Model
STR-D711/D911
Australian Model
STR-D911

This photo is STR-D911.

SPECIFICATIONS

Audio Power Specifications

POWER OUTPUT AND TOTAL HARMONIC DISTORTION

With 8-ohm load, both channels driven, from 20 - 20,000 Hz, rated 100 watts per channel minimum RMS power, with no more than 0.1 % total harmonic distortion from 250 milliwatts to rated output. (US model only)

Amplifier section

Continuous RMS power output (8 ohms, at 20 Hz - 20 kHz less than 0.1 % total harmonic distortion) (FRONT)
STR-D911: 110 W + 110 W
STR-D711: 110 W + 110 W

Surround mode

	Surround mode (8ohms at 1 kHz, THD 0.9 %)	
	STR-D911	STR-D711
FRONT	80 W/ch	80 W/ch
CENTER*	80 W	80 W
REAR	25 W	20 W

* (only in theDOLBY SUR and THEATER modes)

Other Specifications

Dynamic power output: 150 W + 150 W (8 ohms)
200 W + 200 W (4 ohms)

Harmonic distortion at rated output
Less than 0.1 %

Frequency response: PHONO: RIAA equalization curve ±0.5 dB
CD, DAT, TAPE 1,2, VIDEO 1,2,3*: 10 Hz – 50 kHz $^{+0}_{-1}$ dB
* STR-D911 only

Inputs

	Sensitivity	Impedance	S/N (weighting network, input level)
PHONO (MM)	2.5 mV	50 kilohms	74 dB 72 dB** (A, 2.5 mV)
DAT, CD VIDEO 1, 2, 3* TAPE 1, 2	250 mV	50 kilohms	95 dB 80 dB** (A, 250 mV)

* STR-D911 only
** '78 IHF

Outputs

REC OUT VIDEO 1 (AUDIO) OUT	Voltage 250 mV Impedance 10 kilohms
HEADPHONES	Accepts low and high impedance headphones

MUTING: –20 dB
DBFB: +10 dB at 70 Hz
TONE: ±8 dB at 100 Hz and 10 kHz

—Continued on next page—

FM STEREO/FM-AM RECEIVER

SONY®

FM tuner section

Tuning range	87.5 – 108.0 MHz
Antenna terminals	300 ohms, balanced 75 ohms, unbalanced
Sensitivity	Australian model (at 46 dB): 18.3 dBf, 4.5 µV (mono) 38.3 dBf, 45 µV (stereo) Other models (at 50 dB): 18.3 dBf, 4.5 µV (mono) 38.3 dBf, 45 µV (stereo)
Usable sensitivity	11.2 dBf, 2 µV (IHF)
S/N	Mono: 76 dB Stereo: 70 dB
Harmonic distortion at 1 kHz	Mono: 0.3 % Stereo: 0.5 %
Separation	45 dB at 1 kHz
Frequency response	30 Hz – 15 kHz $^{+0.5}_{-2}$ dB
Selectivity	60 dB at 400 kHz

AM tuner section

Tuning range	530 – 1710 kHz (with 10 kHz interval) 531 – 1710 kHz (with 9 kHz interval)
Antenna	Loop antenna
Usable sensitivity	50 dB/m (at 1,000 kHz or 999 kHz)
S/N	54 dB (at 50 mV/m)
Harmonic distortion	0.5% (50 mV/m, 400 Hz)
Selectivity	35 dB (9 kHz), 40 dB (10 kHz)

Video section

Inputs	STR-D911: VIDEO 1,2,3: 1 Vp-p 75 ohms STR-D711: VIDEO 1,2: 1 Vp-p 75 ohms
Outputs	VIDEO 1, MONITOR: 1 Vp-p 75 ohms

General

System	Tuner section: PLL quartz-locked digital synthesizer system Preamplifier section: Low-noise NF type equalizer Power amplifier section: Pure-complimentary SEPP
Power requirements	US, Canadian model: 120 V AC, 60 Hz Australian model: 240 V AC, 50 Hz
Power consumption (in standby condition: 5W)	STR-D911: US model: 195 W Canadian model: 280 VA Australian model: 220 W STR-D711: US model: 195 W Canadian model: 280 VA
AC outlets	US and Canadian models: Two switched, total 120 W Australian model: One switched, 100 W
Dimensions	430 x 148 x 355 mm (17 x 5 $^{7}/_{8}$ x 14 inches)
Mass	STR-D911: 10.1 kg (22 lb 4 oz) STR-D711: 10.0 kg (22 lb 1 oz)

upplied accessories	FM wire antenna (1) AM loop antenna (1) Remote commander (RM-U231) (US, Australian) (1) Remote commander (RM-P311) (Canadian) (1) Sony Batteries SUM-3(NS) (2)

Design and specifications are subject to change without notice.

SAFETY CHECK-OUT (US Model)

After correcting the original service problem, perform the following safety check before releasing the set to the customer:
Check the antenna terminals, metal trim, "metallized" knobs, screws, and all other exposed metal parts for AC leakage. Check leakage as described below.

LEAKAGE TEST

The AC leakage from any exposed metal part to earth ground and from all exposed metal parts to any exposed metal part having a return to chassis, must not exceed 0.5 mA (500 microampers). Leakage current can be measured by any one of three methods.

1. A commercial leakage tester, such as the Simpson 229 or RCA WT-540A. Follow the manufacturers' instructions to use these instruments.
2. A battery-operated AC milliammeter. The Data Precision 245 digital multimeter is suitable for this job.
3. Measuring the voltage drop across a resistor by means of a VOM or battery-operated AC voltmeter. The "limit" indication is 0.75 V, so analog meters must have an accurate low-voltage scale. The Simpson 250 and Sanwa SH-63Trd are examples of a passive VOM that is suitable. Nearly all battery operated digital multimeters that have a 2 V AC range are suitable. (See Fig. A)

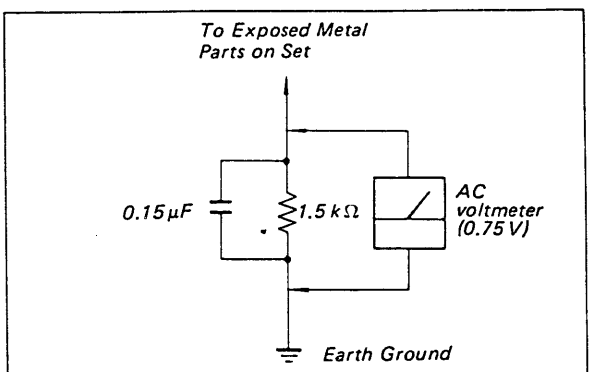

Fig. A. Using an AC voltmeter to check AC leakage.

MODEL IDENTIFICATION

—Specification Label—

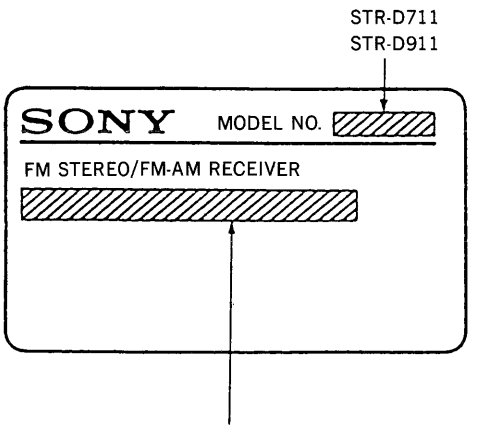

US, Canadian model: AC 120V 60Hz
Australian model : AC 240V 50Hz

DOLBY PRO LOGIC

In the DOLBY SUR or THEATER mode, the Dolby* Pro Logic can be selected. The Dolby Pro Logic Surround Decoder has the same functions for playback as movie theaters and gives a theater-like experience in your listening room, naturally reproducing the audio sound field.

* Manufactured under license from Dolby Laboratories Licensing Corporation. Additionally licensed under one or more of the following patents: U.S. number 3,959,590: Canadian numbers 1,004,603 and 1,037,877. "DOLBY", "Pro Logic", and the double-D symbol are trademarks of Dolby Laboratories Licensing Corporation.

SAFETY-RELATED COMPONENT WARNING!!

COMPONENTS IDENTIFIED BY MARK ⚠ OR DOTTED LINE WITH MARK ⚠ ON THE SCHEMATIC DIAGRAMS AND IN THE PARTS LIST ARE CRITICAL TO SAFE OPERATION. REPLACE THESE COMPONENTS WITH SONY PARTS WHOSE PART NUMBERS APPEAR AS SHOWN IN THIS MANUAL OR IN SUPPLEMENTS PUBLISHED BY SONY.

ATTENTION AU COMPOSANT AYANT RAPPORT À LA SÉCURITÉ!

LES COMPOSANTS IDENTIFIÉS PAR UNE MARQUE ⚠ SUR LES DIAGRAMMES SCHÉMATIQUES ET LA LISTE DES PIÈCES SONT CRITIQUES POUR LA SÉCURITÉ DE FONCTIONNEMENT. NE REMPLACER CES COMPOSANTS QUE PAR DES PIÈCES SONY DONT LES NUMÉROS SONT DONNÉS DANS CE MANUEL OU DANS LES SUPPLÉMENTS PUBLIÉS PAR SONY.

TABLE OF CONTENTS

Section — *Title* — *Page*

1. SERVICE NOTES 4

2. GENERAL
- Identifying the Parts and Controls 6

3. DISASSEMBLY
3-1. Case 7
3-2. Front Panel Assy 7
3-3. Display Board 8
3-4. Back Panel 8
3-5. Tuner/Video Board, SP-TM Board 9
3-6. Power Supply Board, Power Transformer 9
3-7. Main Board 10

4. DIAGRAMS
4-1. Pin Functions 11
4-2. Circuit Boards Location 13
4-3. Printed Wiring Boards—Main Section— 19
4-4. Schematic Diagram—Main Section— 23
4-5. Schematic Diagram—Surround Section (D711)— 28
4-6. Schematic Diagram—Display Section (D711)— 31
4-7. Printed Wiring Boards —Surround/Display Section (D711)— 33
4-8. Printed Wiring Boards —Surround/Display Section (D911)— 35
4-9. Schematic Diagram—Surround Section (D911)— 37
4-10. Schematic Diagram—Display Section (D911)— 40
4-11. Semiconductor Lead Layouts 42

5. EXPLODED VIEWS
5-1. Cabinet Section 44
5-2. Chassis Section 45

6. ELECTRICAL PARTS LIST 46

SECTION 1
SERVICE NOTES

DUPLEX		WITH WHAT HELD DOWN	WHAT IS OPERATED	WHAT FUNCTION IS PERFORMED	SUPPLEMENT
1	FACTORY SET	10 KEY (1), (2), (3)	POWER ON	Initialize for Electrical Adjustment	
2	ALL CLEAR	10 KEY (4), (5), (6)	POWER ON	Initialize	
3	9kHz STEP	TUNING+	POWER ON	AM 9k/10k select	Set to AM.
4	SUR CLEAR	TONE ON/DEFEAT	POWER ON	SOUND FIELD Initialize	
5	FL TUBE CHECK	10 KEY (7), (8), (9)	POWER ON	FL Tube Check and KEY Check	
6	DEMO	DISPLAY	Continue to hold down.	Demonstration	Set to S. F. OFF.
7	LINK MEMORY	LINK	POWER ON	SALES Link Memory Set	

1. FACTORY SET

When ten-keys (1), (2) and (3) are pressed simultaneously and the power is turned on, the following data are stored in the respective RAMs.

TUNER PRESET				
CH	FM W/AM 9k		FM W/AM 10k	
A1	FM	87.50MHz	FM	87.50MHz
A2	FM	88.00MHz	FM	88.00MHz
A3	FM	98.00MHz	FM	98.00MHz
A4	FM	100.00MHz	FM	100.00MHz
A5	FM	108.00MHz	FM	108.00MHz
A6	AM	531kHz	AM	530kHz
A7	AM	621kHz	AM	620kHz
A8	AM	1053kHz	AM	1050kHz
A9	AM	1485kHz	AM	1490kHz
A0	AM	1710kHz	AM	1710kHz

SOUND FIELD	BASS	TREBLE
SIMULATED	−10dB	−10dB
ACOUSTIC	+10dB	+10dB

2. ALL CLEAR

When ten-keys (4), (5) and (6) are pressed simultaneously and the power is turned on, all the RAMs are cleared and initialized.

3. 9kHz STEP

During AM 10kHz STEP TUNING, set to AM and turn off the power. Then press and hold down TUNING + key, turn on the power, and change AM TUNING STEP to 9kHz to initialize all the preset channels.
(When this procedure is performed during AM 9kHz STEP, AM TUNING STEP is changed to 10kHz.)

4. SUR CLEAR

When TONE ON/DEFEAT key is held down and the power is turned on, SOUND FIELD memory is initialized.

5. FL TUBE CHECK/KEY CHECK

When ten-keys (7), (8) and (9) are pressed simultaneously and the power is turned on, FL Tube TEST Display starts.

- ○ All lighting
- ○ One segment lighting for each digit
- ○ Key count indication

The count is decremented for each key input. When it is down to zero, the POWER key is used to terminate this check.

6. DEMO

When SOUND FIELD is turned off and DISPLAY key continues to be held down (for 3 seconds), Demonstration starts. If any other key is input, this DEMO stops and processing for that key is done.

※DEMO causes TONE data for ACOUSTIC and DOLBY SUR to be changed and set as follows:
DOLBY SUR's PROLOGIC MODE=PHANTOM
REAR/CENTER LEVEL=+6dB
DELAY TIME=21mS

In case of any key input, the state when DEMO is suspended by key input will be maintained.

7. LINK MEMORY

When LINK is held down and the power is turned on, all RAMs are cleared and initialized. Also, the following sound fields are stored in the respective functions and LINK is turned on.

FUNCTION	SOUND FIELD
PHONO	OFF
CD	DANCE
TUNER	OFF
VIDEO 1	THEATER
VIDEO 2	DOLBY
VIDEO 3	LIVE
TAPE 1	HALL
DAT	HALL

◎ Initial Operation Set State (1)

D911/D711		
FUNCTION	TUNER	FM 87.50MHz (AM 530kHz)
		FM MODE AUTO
		TUNING LEVEL LOW
		INDEX NO INDEX
		PRESET NO. None (A_)
MONITOR	VIDEO 1	
TAPE2 MONITOR	OFF	
DBFB	OFF	
MUTING (−20dB)	OFF	
EDIT VIDEO	VIDEO 2 → 1	
EDIT AUDIO	OFF	
CURSOR MODE	SUR	
SOUND FIELD	OFF	
TONE	DEFEAT	
LINK	OFF	
TEST TONE	OFF	
DISPLAY	FREQ Display	
LAST S. F. MODE	ACOUSTIC	

TUNER INDEX Name (A1 to C0)→ No INDEX.
FUNCTION (Other Than TUNER) INDEX Name →
The Same FUNCTION Name

◎ Initial Operation Set State (2 : Sound Field)

		D911	D711
HALL	BASS (dB)	+2	+2
	TREBLE (dB)	0	0
	DELAY TIME (ms)	30	20
	REAR LEVEL (dB)	0	0
	EFFECT LEVEL	9	None
SIMULATED	BASS (dB)	0	0
	TREBLE (dB)	+2	+2
	DELAY TIME (ms)	21	15
	REAR LEVEL (dB)	0	0
DANCE	BASS (dB)	+10	+8
	TREBLE (dB)	+8	+6
	DELAY TIME (ms)	21	20
	REAR LEVEL (dB)	0	0
	EFFECT LEVEL	7	None
LIVE	BASS (dB)	+2	+2
	TREBLE (dB)	+4	+4
	DELAY TIME (ms)	30	20
	REAR LEVEL (dB)	0	0
	EFFECT LEVEL	7	None
DOLBY SUR	BASS (dB)	0	0
	TREBLE (dB)	0	0
	DELAY TIME (ms)	15	15
	REAR LEVEL (dB)	0	0
	CENTER LEVEL	0	0
	PRO LOGIC MODE	PHANTOM	PHANTOM
THEATER	BASS (dB)	+4	+4
	TREBLE (dB)	−4	−4
	DELAY TIME (ms)	30	15
	REAR LEVEL (dB)	0	0
	CENTER LEVEL	0	0
	PRO LOGIC MODE	PHANTOM	PHANTOM
	EFFECT LEVEL	7	None
ACOUSTIC	BASS (dB)	0	0
	TREBLE (dB)	0	0

Identifying the Parts and Controls

Front Panel

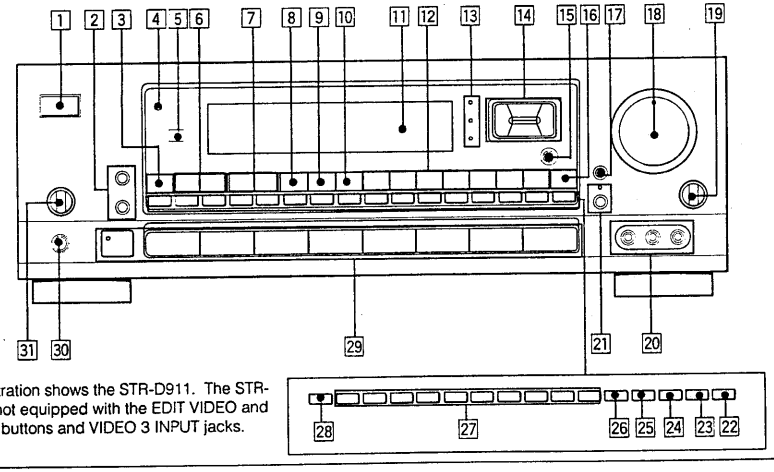

This illustration shows the STR-D911. The STR-D711 is not equipped with the EDIT VIDEO and VIDEO 3 buttons and VIDEO 3 INPUT jacks.

1 **POWER switch**

2 **EDIT VIDEO/AUDIO buttons** (See pages 21, 22, 23.) (EDIT VIDEO button: STR-D911 only)

3 **TUNING LEVEL** (See page 15.)

4 **STANDBY indicator** (The STANDBY indicator lights up when the power cord is connected.: STR-D911 for Australian model only)

5 **Remote sensor**

6 **INDEX SELECT/TUNING +/– buttons** (See pages 15, 19.)

7 **PRESET TUNING +/– buttons** (See pages 17, 19)

8 **SOUND FIELD LINK button** (See page 29.)

9 **SOUND FIELD ON/OFF button** (See page 25.)

10 **PRO LOGIC MODE button** (See pages 24, 25.)

11 **Display window**

12 **SOUND FIELD buttons** (See pages 26, 27, 28, 29.)

13 **CURSOR MODE indicators**

14 **CURSOR MODEoperation buttons** (See pages 13, 18, 25, 26, 28.)

15 **CURSOR MODE button** (See pages 13, 18, 25, 26, 28.)

16 **TONE ON/DEFEAT button** (See page 28.)

17 **DBFB button** (See page 12.)

18 **MASTER VOLUME control** (See page 12.)

19 **BALANCE control** (See page 12.)

20 **VIDEO 3 INPUT jacks** (STR-D911 only)

21 **MUTING button and indicator** (See pages 12.)

22 **DISPLAY button** (See pages 15, 18, 19.)

23 **FM MODE button** (See page 14.)

24 **DIRECT button** (See page 14.)

25 **FM/AM button** (See pages 14, 15.)

26 **MEMORY button** (See page 16.)

27 **Numeric buttons** (See pages 14, 16, 17, 19.)

28 **SHIFT button** (See pages 16, 17.)

29 **Function selectors and TAPE 2 MONITOR button and indicator** (VIDEO 3 button: STR-D911 only) (See pages 12, 20.)

30 **HEADPHONES jack**

31 **SPEAKERS selector** (See page 12.)

Remote Commander (Except for The STR-D911 for Canadian Model)

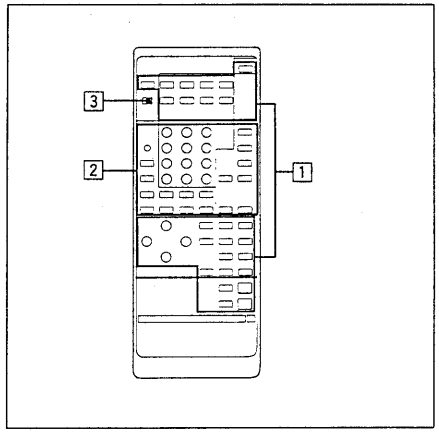

1 **Receiver control section**

FUNCTION buttons

DAT, CD, TUNER, PHONO, VIDEO 1, VIDEO 2, VIDEO 3, TAPE: The each function is selected and the each unit enters its operating mode automatically.
SYSTEM OFF: Turns off the power of the whole system.

SOUND FIELD buttons

USER/PRE: This button does not function.
MODE: Selects the sound field mode.
ON/OFF: Turns on/off the sound field system.

BAND: This button does not function.
EQ: Turns on/off the setting of TONE controls.
T. (test) TONE: Generates a pink noise signal that is sent in succession to each speaker.
CURSOR MODE: Select CURSOR MODE.
CURSOR operating buttons
REAR LEVEL +/– buttons: Control the volume of rear speakers (surround level).
CENTER LEVEL +/– buttons : Control the volume of center speaker (surround level).
DBFB button: Turns on/off the DBFB (Dynamic Bass Feedback).
MUTING button: Mutes the sound.
MASTER VOL +/– buttons: Control the receiver volume.
SLEEP: Set to the SLEEP timer mode. In this mode, the unit is automatically turned off after the designated time. (page 13)

Note

THe VIDEO 3 button functions only for the STR-D911.

2 **Other equipment control section**

The operative buttons are changed according to the function mode and the setting of the SYSTEM/TV selector.
Numeric buttons (1 to 0): Designate the number.
>10: Designate the number more than 10.
ENTER: Press after designating the TV/VCR channel.
TV/VIDEO selector: Selects the TV program to see : TV or VIDEO.
ANT TV/VTR button: Selects the output signal from the antenna terminal on the VCR, either a TV signal or VCR programs.
SHIFT: Select the memory page (A, B or C) only in the TUNER mode.
CH/PRESET +/– buttons: Select a preset station of tuner or a preset channel of TV/VCR.
INDEX: Select another index station.
◄◄/►►: fast winding/Manual search
●: Recording (Press ● and ◄ or ► at the same time.)
◄/►: Play
■: Stop
II: Pause
I◄◄/►►I: Locates a desired selection.
D (disc) SKIP: Disc skip (for a CD player equipped with a multi-disc changer)
SELECT: Changes the settings of the FUNCTION buttons.
VISUAL POWER: Turns on/off the power of TV, VCR and LD player.

3 **SYSTEM/TV mode switch**

In TV mode (When setting the SYSTEM/TV selector to TV.)

Only MUTING, MASTER VOL +/– and the operative buttons in TV section on the list described on the next page can be used.

This section is extracted from instruction manual.

SECTION 3
DISASSEMBLY

Note : Follow the disassembly procedure in the numerical order given.

3-1. CASE

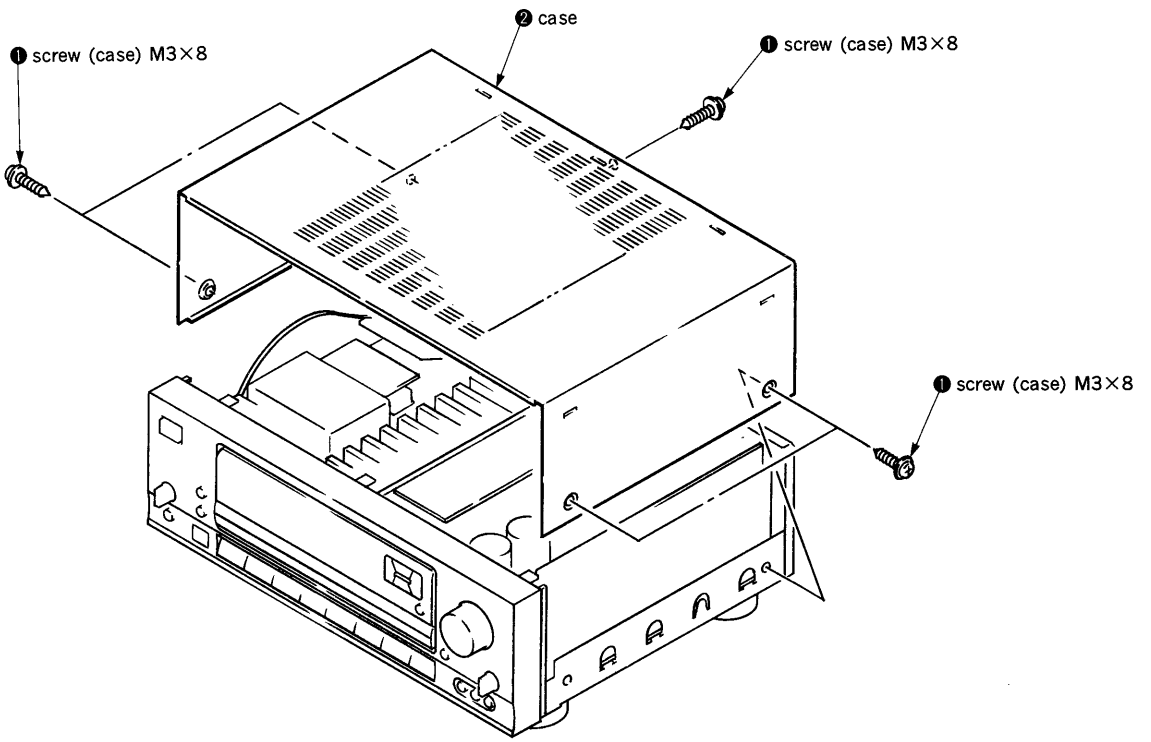

3-2. FRONT PANEL ASSY

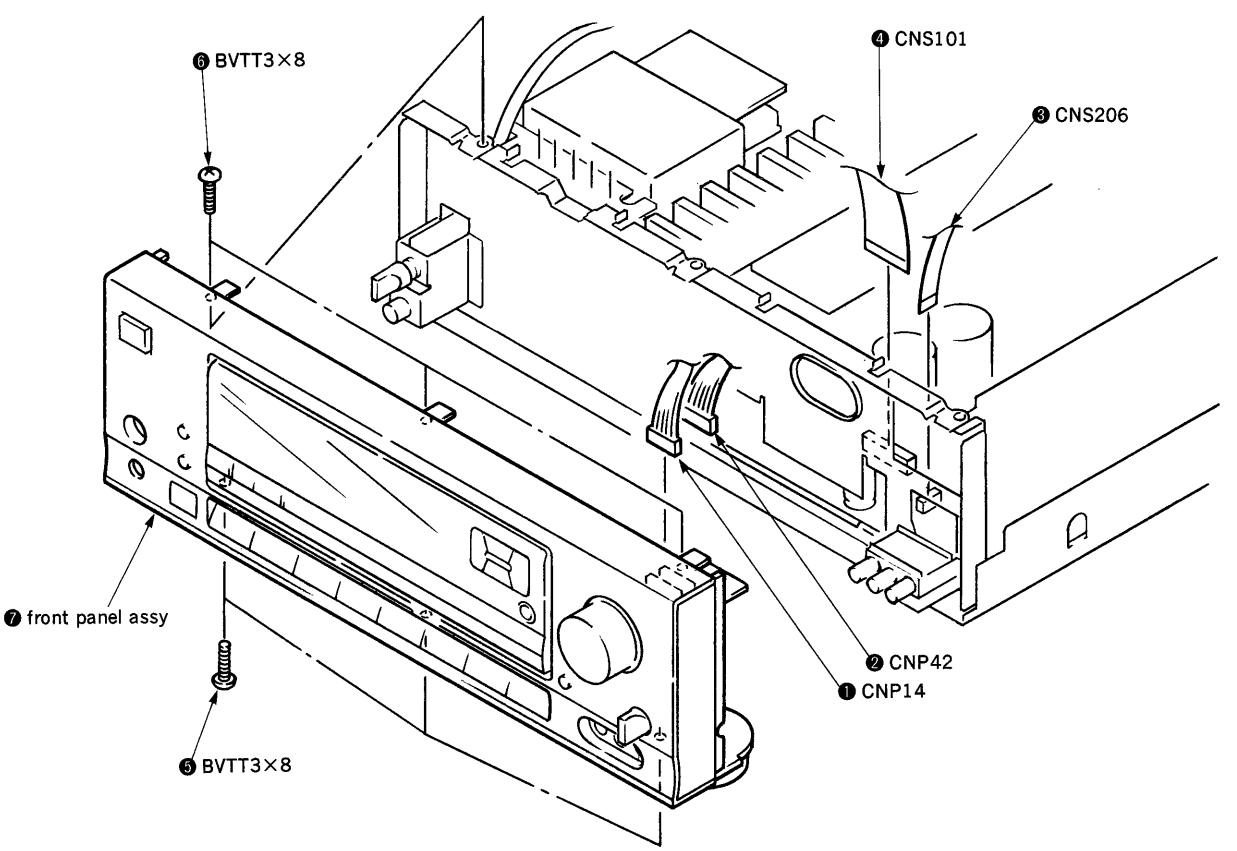

3-3. DISPLAY BOARD

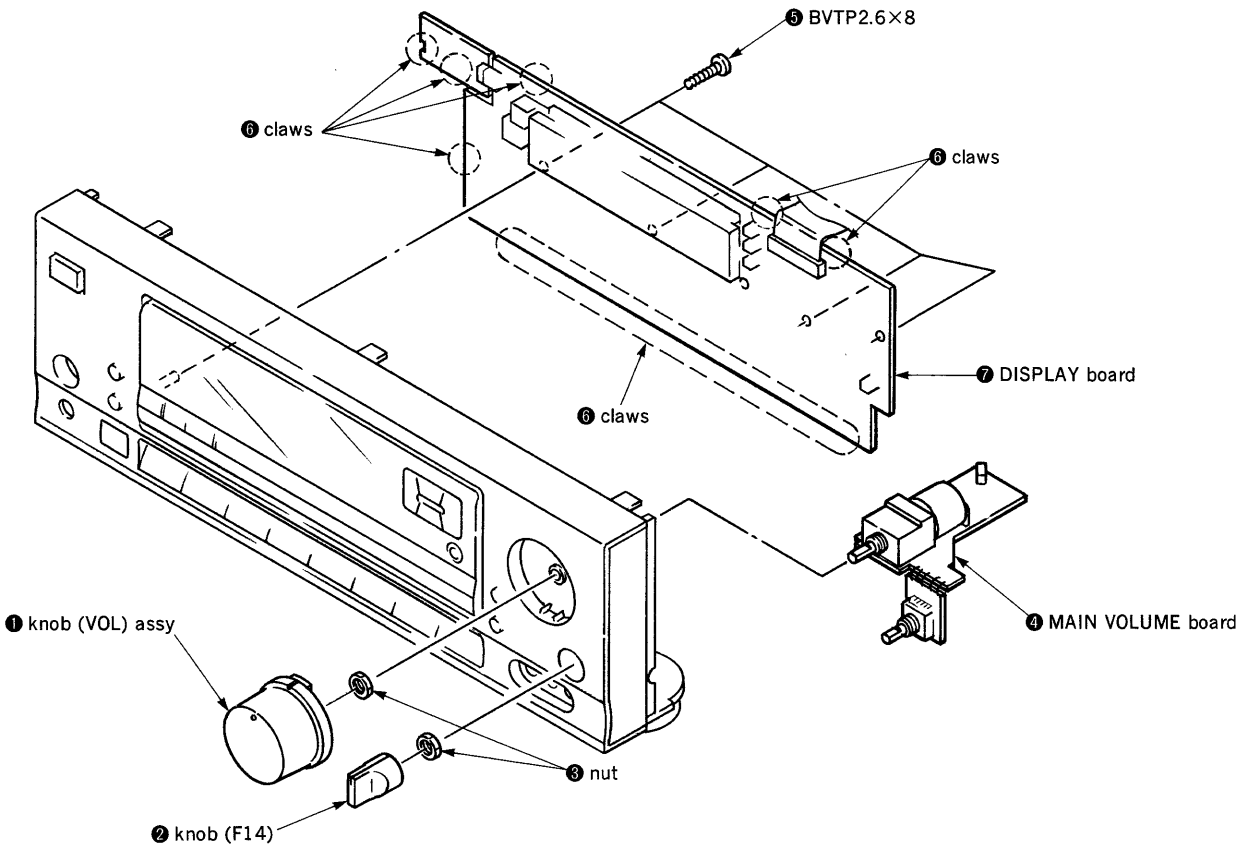

3-4. BACK PANEL

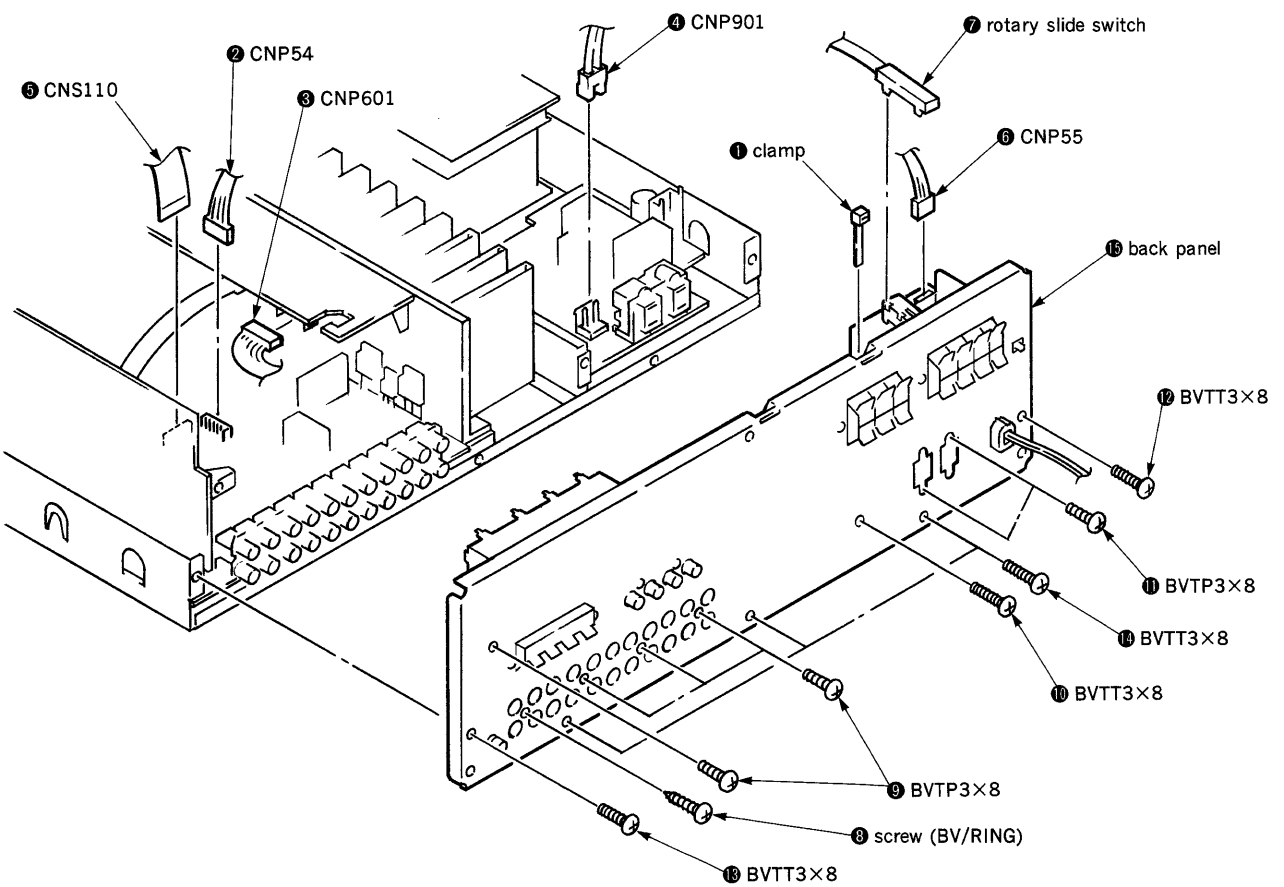

3-5. TUNER/VIDEO BOARD, SP-TM BOARD

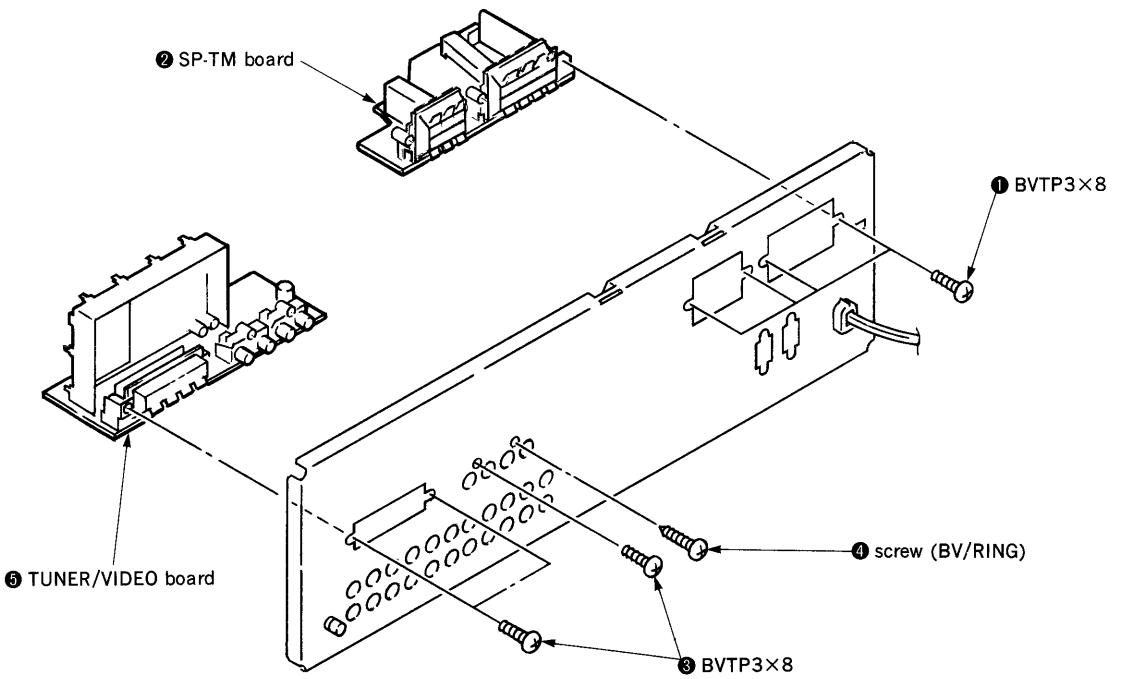

3-6. POWER SUPPLY BOARD, POWER TRANSFORMER

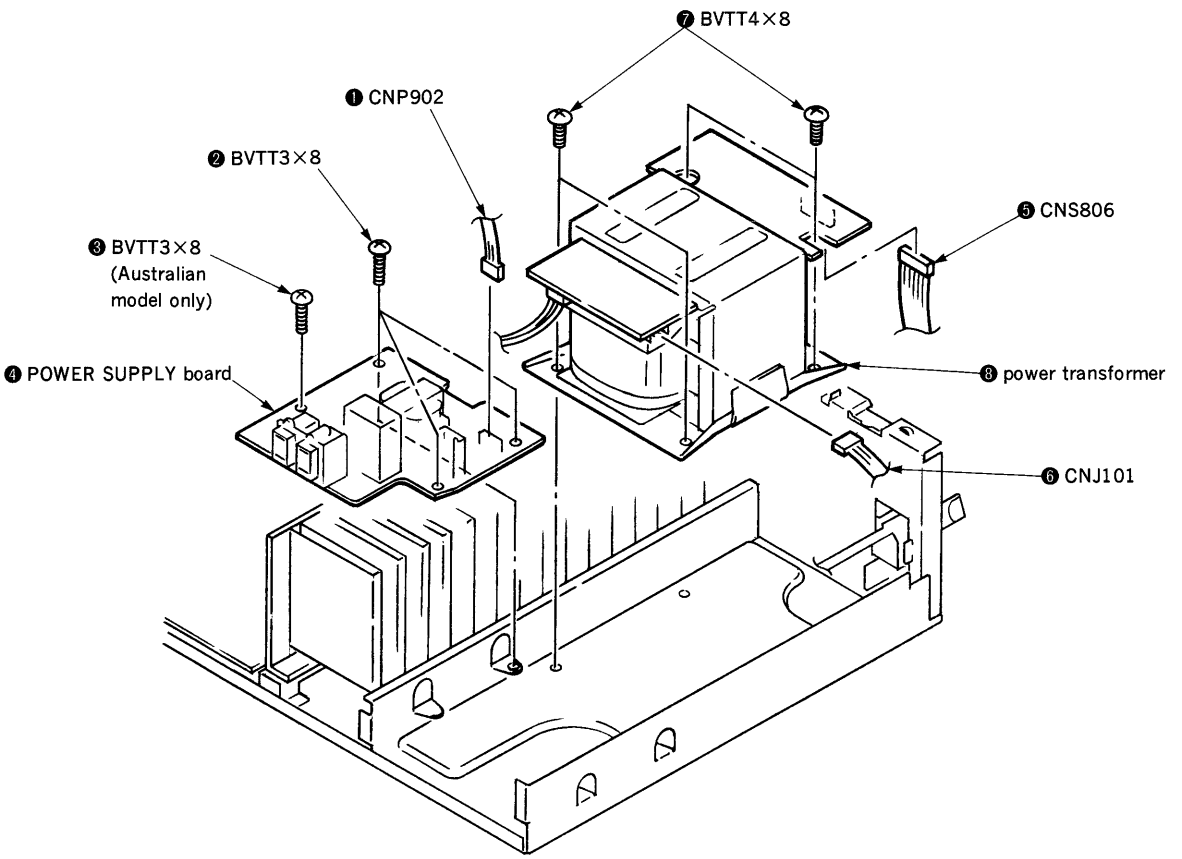

3-7. MAIN BOARD

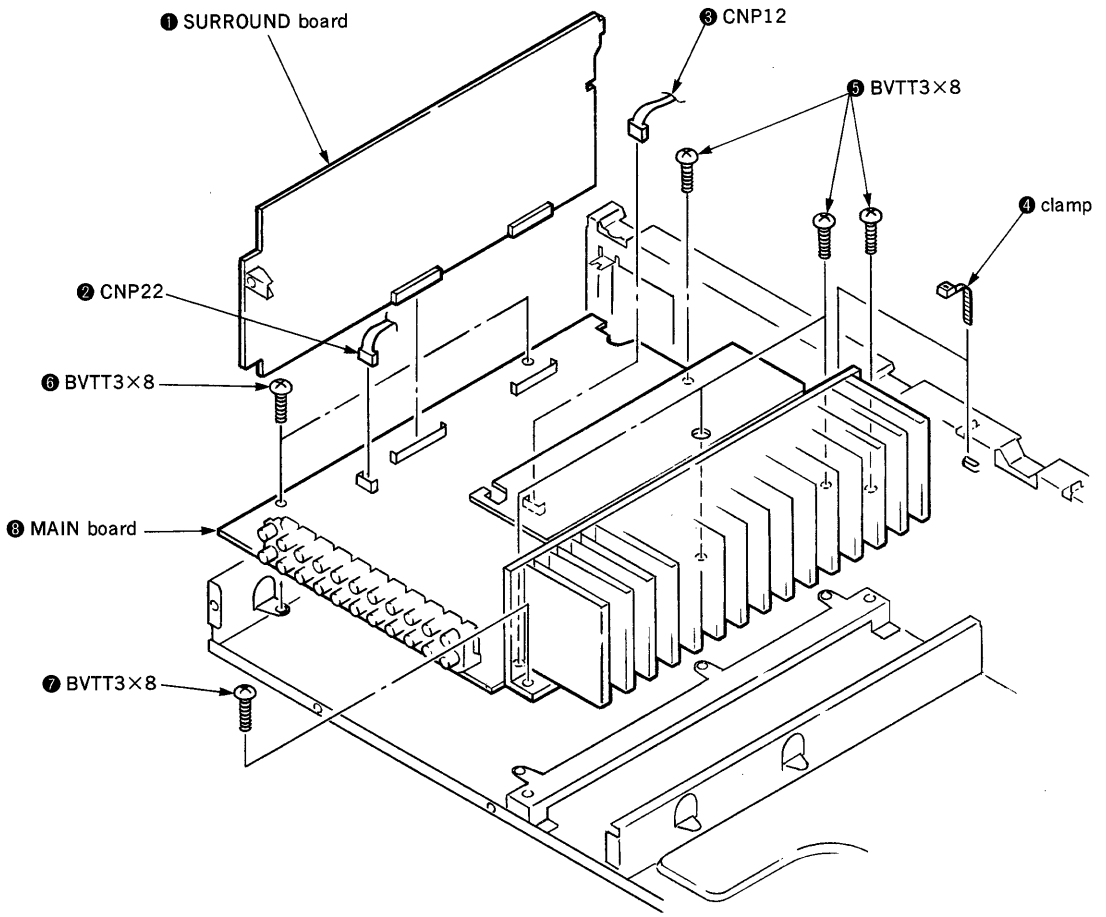

SECTION 4
DIAGRAMS

4-1. PIN FUNCTIONS

IC202 μPD75517GF-212-3B9 (STR-D911)
IC202 μPD75517GF-213-3B9 (STR-D711)

Pin No.	Pin Name	Signal	I/O	Pin Function
1	P. IN	AN0	I	POWER IN
2	A/D. REF	AV_{REF}	—	REFERENCE VOLTAGE OF A/D CONVERTER (5V)
3	+5V	V_{DD}	—	+5V
4	+5V	V_{DD}	—	+5V
5		P113	O	OPEN
6	T. MUT	P112	O	TUNER MUTE
7	TONE. LAT	P111	O	TONE CE (LATCH)
8	LED TONE	P110	O	C. TONE LED
9	DBFB	P103	O	DBFB ON/OFF
10	KEY-O. C	P102	O	KEY OUT CONTROL A0
11	KEY-O. B	P101	O	KEY OUT CONTROL A1
12	KEY-O. A	P100	O	KEY OUT CONTROL A2
13	T-2	P93	O	TAPE2 MONITOR
14	KEY-I. C	P92	O	KEY IN CONTROL A0
15	KEY-I. B	P91	O	KEY IN CONTROL A1
16	KEY-I. A	P90	O	KEY IN CONTROL A2
17	KEY. IN	SI1/P83	I	KEY INPUT
18	FL. DATA	SO1/P82	O	FL DRIVER SERIAL DATA
19	FL. CK	$\overline{SCK1}$/P81	O	FL DRIVER SERIAL CLOCK
20	LED. SUR	PP0/P80	O	C. SURR LED
21	VR (+)	KR7/P73	O	VOLUME UP
22	VR (−)	KR6/P72	O	VOLUME DOWN
23	FL. LS	KR5/P71	O	FL DRIVER LATCH
24	FL. CL	KR4/P70	O	FL DRIVER CLEAR
25	CM2 (P. L1)	KR3/P63	O	FOR DOLBY PRO LOGIC PMI SSM-2125 (STR-D911) PRO LOGIC CONTROL (STR-D711)
26	LED. INDEX	KR2/P62	O	C. INDEX LED
27	SURR. RY	KR1/P61	O	SURROUND RELAY
28	CENTER. RY	KR0/P60	O	CENTER RELAY
29		P53	O	OPEN
30	VOL LED	P52	O	VOLUME LED (PULL-UP : 2.2k)
31	VIDEO-A	P51	O	VIDEO A SELECT (PULL-UP : 2.2k)
32	BRIDGEABLE OUT	P50	O	SP=8Ω : 2CH →"L", SURR →"H"/SP=4Ω : ALL "H" (PULL-UP : 2.2k)
33		V_{SS}	—	GND
34		P43	I	GND
35		P42	I	GND
36		P41	I	GND
37	BRIDGEABLE IN	P40	I	SP 4Ω/8Ω SELECT 4Ω="L"
38	PW. RY	P33	O	POWER RELAY
39	SP. RY	P32	O	SPEAKER RELAY
40	S. CLK	P31	O	SERIAL CLOCK
41	S. DATA	P30	O	SERIAL DATA
42	LAT	P23/BUZ	O	SERIAL LATCH
43	FUNC. MUT	P22/PCL	O	FUNCTION MUTE
44	−20DB. MUT	P21	O	−20dB MUTE
45	PROT. MUT	P20/PTO0	O	PROTECTOR MUTE (Use a things S-MUTE)

Pin No.	Pin Name	Signal	I/O	Pin Function
46	STEREO. IN	P13/TI0	I	TUNER STEREO SIGNAL INPUT (PULL-UP : 10k)
47	PROT. IN	P12/INT2	I	PROTECTOR INPUT (PULL-UP : 10k)
48	GND	P11/INT1	—	GND (PULL-UP : 10k)
49	REMO. MA	P10/INT0	I	REMOTE CONTROL INPUT (PULL-UP : 10k)
50	ADJ. LAT	P03/SI0/SB1	I	AUTO MEASUREMENT LATCH (PULL-UP : 10k)
51	A. STOP	P02/SO0/SB0	I	TUNER AUTO STOP (PULL-UP : 10k)
52	D. IN	P01/$\overline{\text{SCK0}}$	I	IF COUNT DATA INPUT (PULL-UP : 10k)
53	STOP	P00/INT4	I	STOP DETECT
54	G	V_{ss}	—	GND
55		XT1	—	GND
56		XT2	—	OPEN
57	G	IC	—	GND
58	OSC	X1	—	CRYSTAL OSCILLATOR 4.19MHz
59	OSC	X2	—	CRYSTAL OSCILLATOR 4.19MHz
60	RESET	$\overline{\text{RESET}}$	I	RESET INPUT
61	DSP. LAT	P143	O	DSP LATCH A0 (PULL-UP : 2.2k) (STR-D911) DIGITAL DELAY LATCH (PULL-UP : 2.2k) (STR-D711)
62	SURR. A	P142	O	SURROUND SELECT SWITCH (SURR A is not used) (PULL-UP : 2.2k)
63	SURR. B	P141	O	SURROUND SELECT SWITCH (PULL-UP : 2.2k)
64	SURR. C	P140	O	SURROUND SELECT SWITCH (PULL-UP : 2.2k)
65	SURR. D	P133	O	SURROUND SELECT SWITCH (PULL-UP : *)
66	DM1 (P. L6)	P132	O	FOR DOLBY PRO LOGIC IC PMI SSM-2125 (STR-D911) PRO LOGIC CONTROL (STR-D711)
67	DM2 (P. L7)	P131	O	
68	DM3 (P. L3)	P130	O	
69	DM4 (P. L4)	P123	O	
70	CM1 (P. L5)	P122	O	
71		P121	O	OPEN
72		P120	O	OPEN
73	G	AV_{ss}	—	GND
74	R. LEVEL	AN7/P153	I	——
75		AN6/P152	I	GND
76		AN5/P151	I	GND
77		AN4/P150	I	GND
78	L. LEVEL	AN3	I	——
79		AN2	I	GND
80		AN1	I	GND

* : Not use is OPEN (Use is PULL-UP)

CNS304 PIN NAME / SOUND FIELD	SURR. B	SURR. C	SURR. D
HALL	L	H	H
LIVE	L	L	H
DANCE	L	H	H
THEATER	L	L	H
DOLBY	H	X	L

4-2. CIRCUIT BOARDS LOCATION

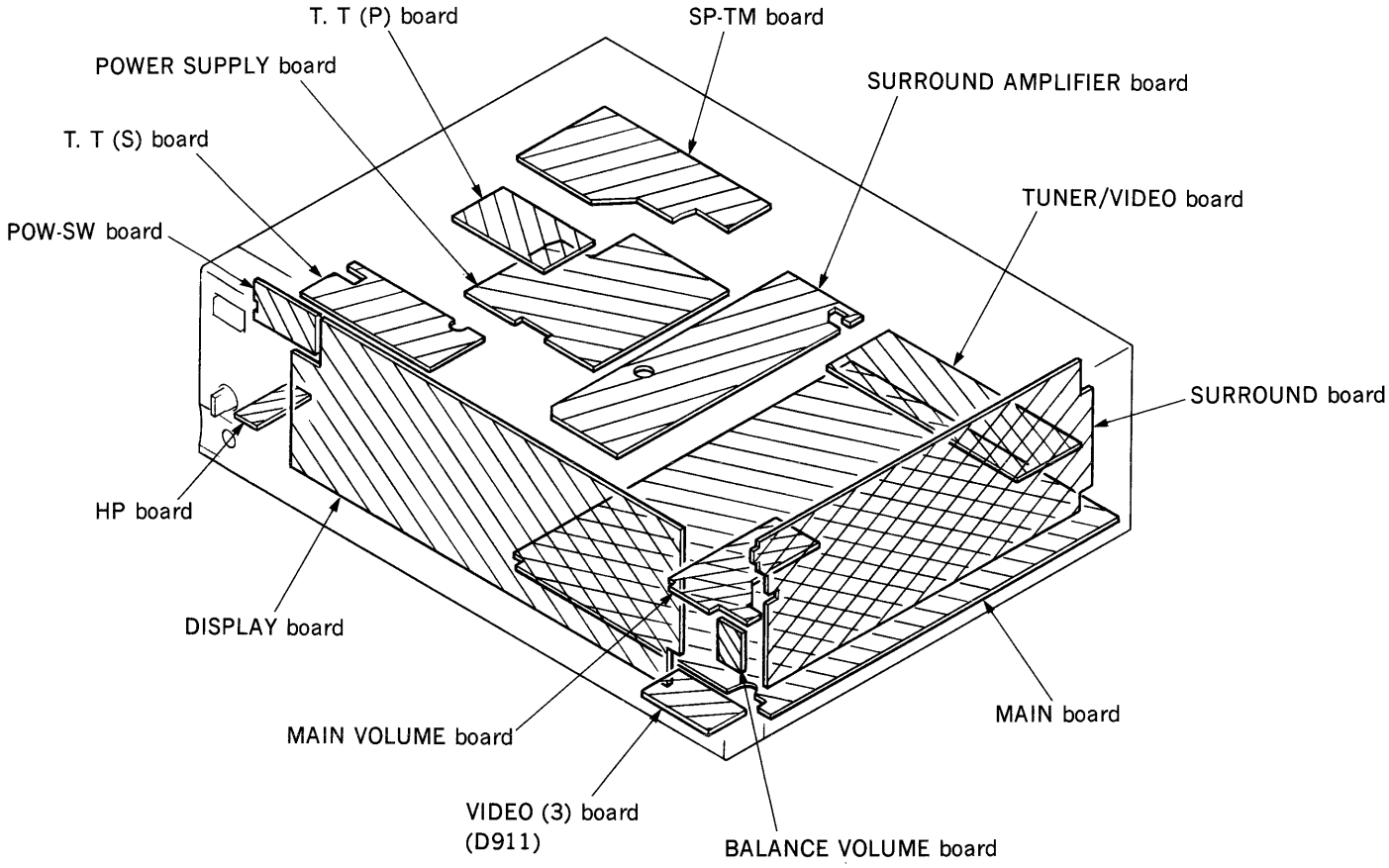

• FL101 FLUORESCENT INDICATOR TUBE

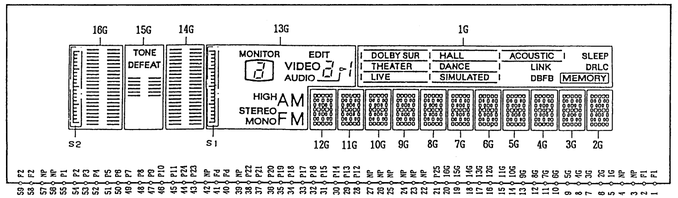

• IC Block Diagrams

IC101 MSC7162GS

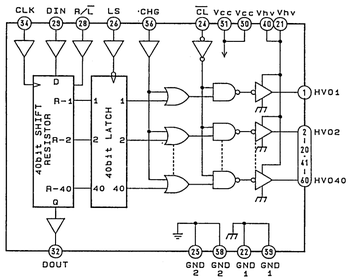

IC103 SN74HC237

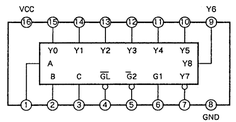

IC104 SN74HC151

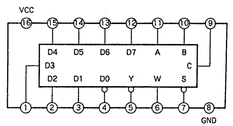

IC301 YM7128 (D911)

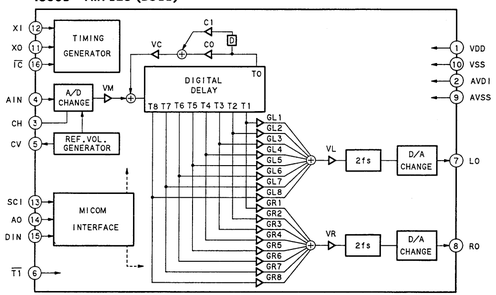

IC306 LA2730 (D911)

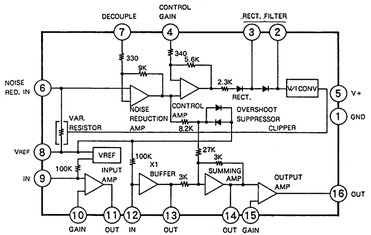

IC306 LA2780N (D711)

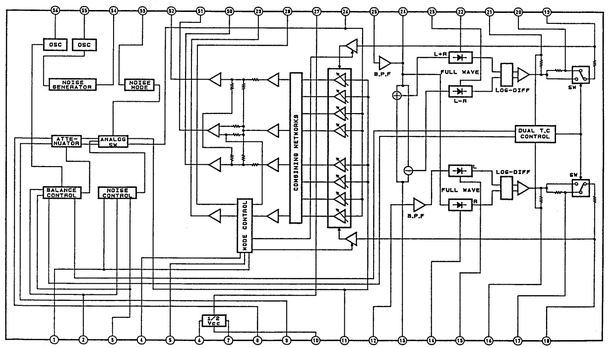

IC307, 308 NE571N-A (D911)

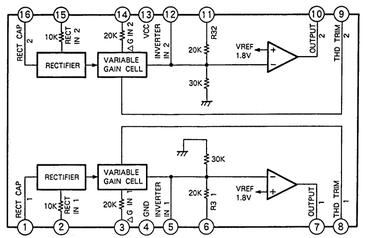

IC403 LC7535

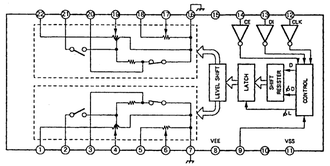

IC305 SSM-2126A (D911)

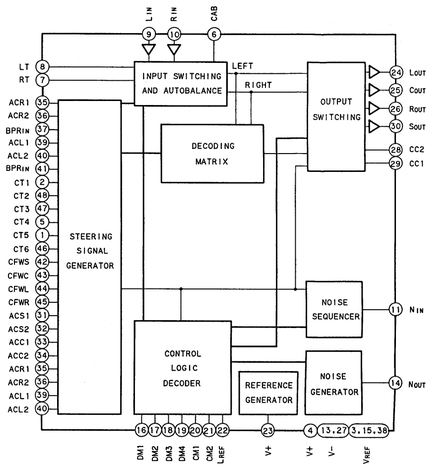

IC305 LV1000NA (D711)

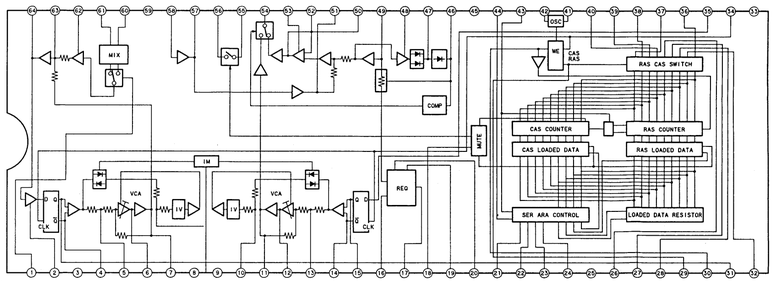

4-3. PRINTED WIRING BOARDS —MAIN SECTION—

● Refer to page 42 for Semiconductor Lead Layouts.

● Semiconductor Location

Ref. No.	Location	Ref. No.	Location
D101	E-14	IC502	E-21
D202	D-13	IC503	D-20
D203	D-17	IC621	D-8
D204	D-13	IC701	I-20
D205	D-16	IC971	H-14
D540	D-18	IC972	I-13
D541	G-22	IC973	H-14
D542	D-18		
D621	E-9	Q201	D-16
D641	C-10	Q202	D-16
D645	C-2	Q210	F-16
D651	I-17	Q211	F-16
D652	I-18	Q212	D-18
D653	J-19	Q213	D-17
D654	I-17	Q251	G-5
D703	J-23	Q252	F-6
D704	I-22	Q531	D-19
D705	G-20	Q532	C-13
D706	G-20	Q581	D-19
D753	J-15	Q614	C-10
D754	I-15	Q621	E-9
D910	F-17	Q643	B-3
D911	F-17	Q651	I-17
D951	E-29	Q652	I-17
D952	E-29	Q653	I-18
D953	E-29	Q654	I-18
D954	E-29	Q656	J-17
D955	E-29	Q661	I-18
D956	E-30	Q662	I-18
D957	C-32	Q663	I-17
D958	C-32	Q707	I-22
D959	E-30	Q708	I-21
D960	E-30	Q719	G-20
D971	G-9	Q721	H-22
D973	E-10	Q722	H-22
D974	J-13	Q723	H-22
D975	H-10	Q757	J-16
D978	F-13	Q758	I-15
D979	F-13	Q951	C-32
D980	F-13	Q952	D-32
D981	F-13	Q953	E-30
		Q954	E-31
IC201	E-13	Q955	E-31
IC202	E-15	Q956	E-32
IC251	G-6	Q971	J-13
IC350	C-19	Q972	G-10
IC501	C-22		

Note:
- ○—— : parts extracted from the component side.
- ■ : parts mounted on the conductor side.

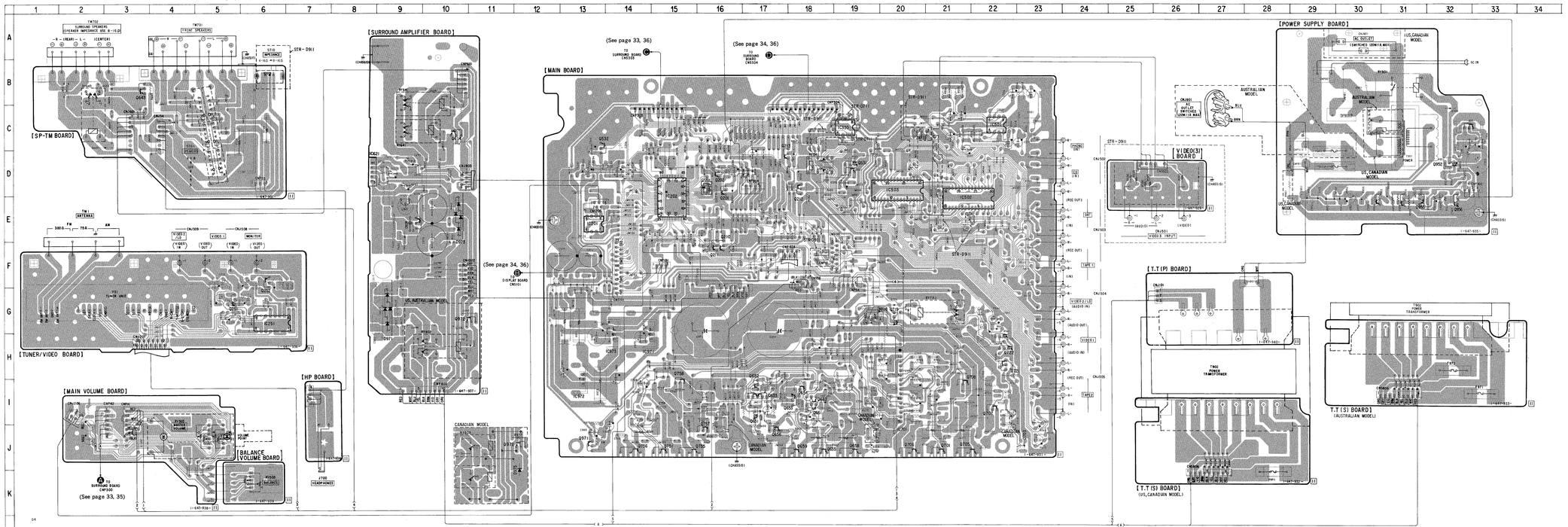

4-4. SCHEMATIC DIAGRAM —MAIN SECTION—

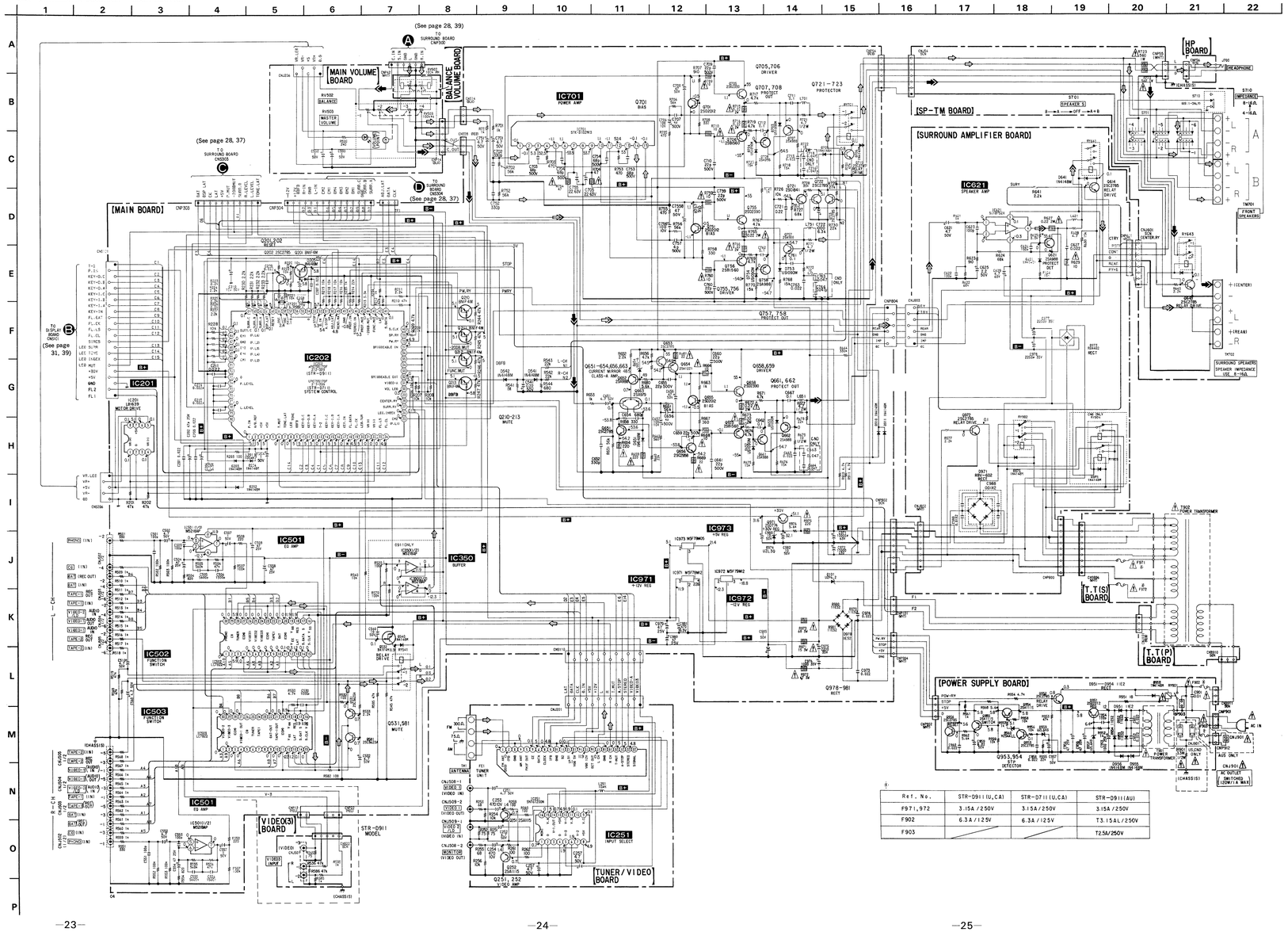

Ref. No.	STR-D911(U,CA)	STR-D711(U,CA)	STR-D911(AU)
F971,972	3.15A/250V	3.15A/250V	3.15A/250V
F902	6.3A/125V	6.3A/125V	T3.15AL/250V
F903			T2.5A/250V

• IC Block Diagrams

IC201 LB1639

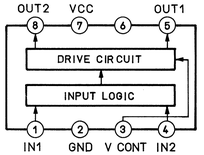

IC251 SN761200N

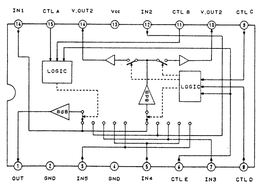

IC502, 503 LC7822

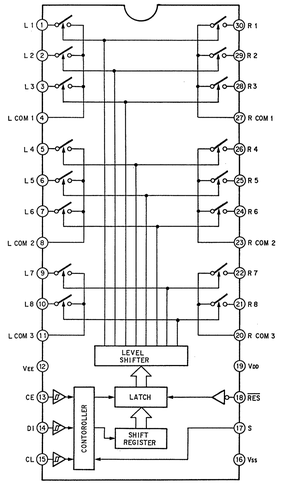

IC701 STK3102-MK3

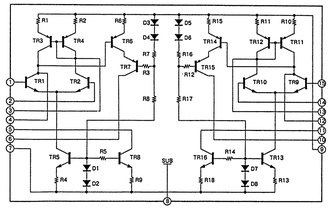

Note:

- All capacitors are in μF unless otherwise noted. pF: μμF 50WV or less are not indicated except for electrolytics and tantalums.
- All resistors are in Ω and ¼W or less unless otherwise specified.
- △ : internal component.
- ▭ : nonflammable resistor.

Note:	Note:
The components identified by mark ⚠ or dotted line with mark ⚠ are critical for safety. Replace only with part number specified.	Les composants identifiés par une marque ⚠ sont critiques pour la sécurité. Ne les remplacer que par une pièce portant le numéro spécifié.

- Voltage is dc with respect to ground under no-signal (detuned) conditions.
  no mark: PHONO
- Voltages are taken with a VOM (Input Impedance 10MΩ). Voltage variations may be noted due to normal production tolerances.
- Signal path.
  ⇨ : FM
  ⇨ : SURROUND
  ➡ : CENTER

4-5. SCHEMATIC DIAGRAM —SURROUND SECTION (D711)— •Refer to page 14 for IC Block Diagrams.

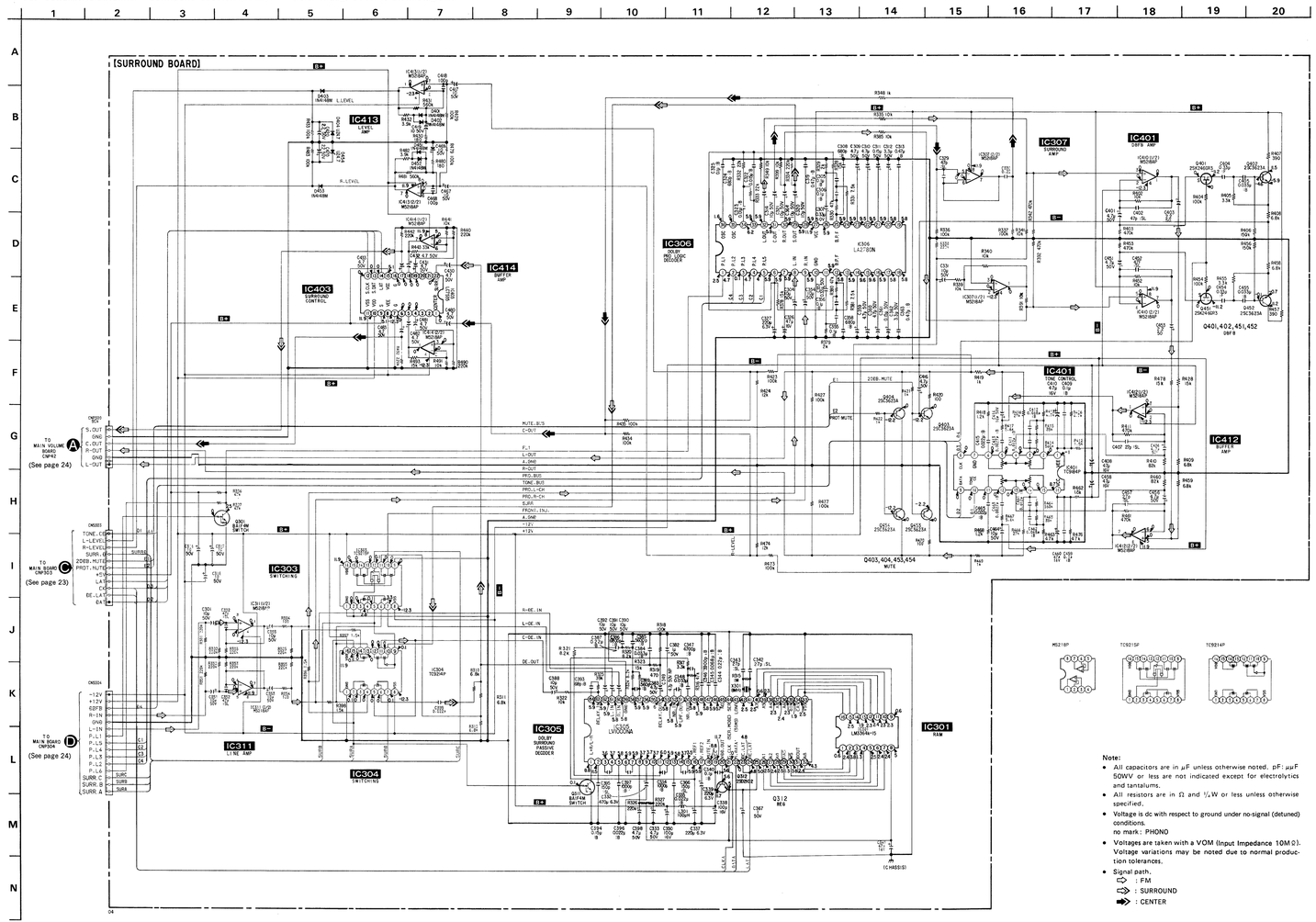

Note:
- All capacitors are in μF unless otherwise noted. pF: μμF 50WV or less are not indicated except for electrolytics and tantaliums.
- All resistors are in Ω and ¼W or less unless otherwise specified.
- Voltage is dc with respect to ground under no-signal (detuned) conditions.
  no mark : PHONO
- Voltages are taken with a VOM (Input Impedance 10MΩ). Voltage variations may be noted due to normal production tolerances.
- Signal path.
  ⇨ : FM
  ⇨ : SURROUND
  ➡ : CENTER

4-6. SCHEMATIC DIAGRAM —DISPLAY SECTION (D711)— •Refer to page 14 for IC Block Diagrams.

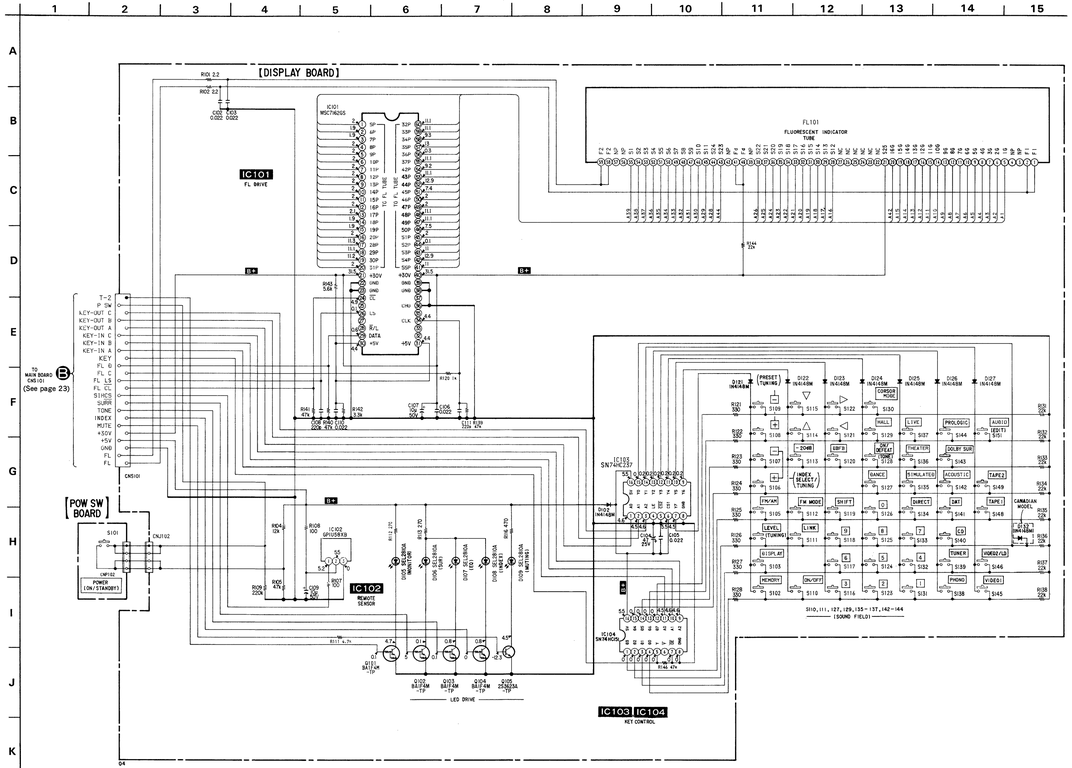

4-7. PRINTED WIRING BOARDS —SURROUND/DISPLAY SECTION (D711)—

• Refer to page 42 for Semiconductor Lead Layouts.

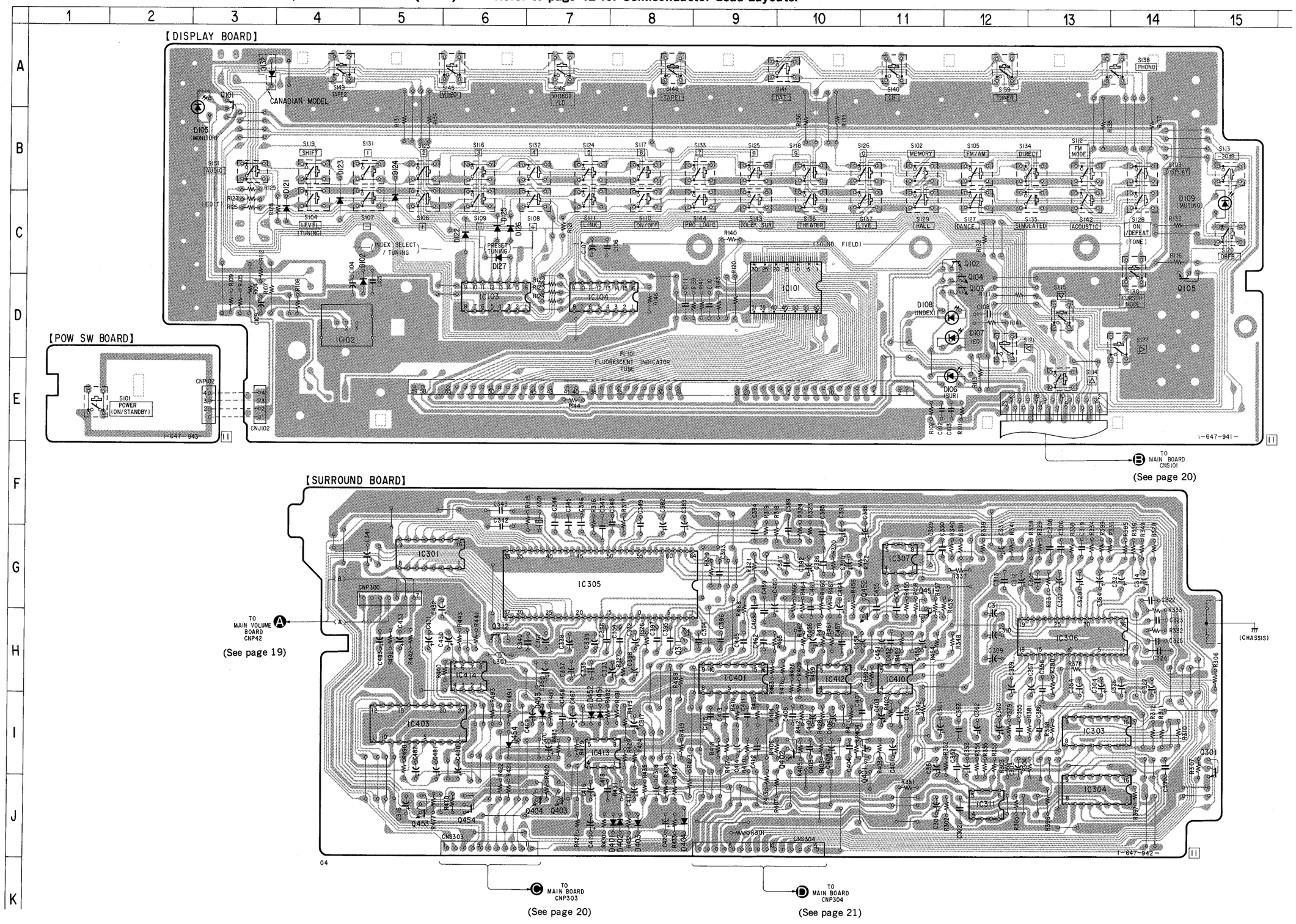

• Semiconductor Location

Ref. No.	Location
D102	D-5
D105	B-3
D106	E-12
D107	D-12
D108	D-12
D109	C-15
D121	C-4
D122	C-6
D123	C-4
D124	C-5
D125	C-6
D126	C-6
D127	C-6
D132	A-3
D401	J-8
D402	J-8
D403	J-8
D404	J-8
D451	I-7
D452	I-7
D453	I-7
D454	I-6
IC101	D-10
IC102	D-4
IC103	D-6
IC104	D-7
IC301	G-5
IC303	I-13
IC304	J-13
IC305	G-7
IC306	H-13
IC307	G-11
IC311	J-12
IC401	H-9
IC403	I-5
IC410	H-11
IC412	H-10
IC413	I-7
IC414	H-6
Q101	B-3
Q102	C-12
Q103	D-12
Q104	D-12
Q105	D-14
Q301	I-15
Q311	H-8
Q312	H-6
Q401	I-11
Q402	I-10
Q403	J-7
Q404	J-7
Q451	G-11
Q452	G-11
Q453	J-5
Q454	J-6

Note:
• ○—— : parts extracted from the component side.

• **Semiconductor Location**

Ref. No.	Location
D102	D-5
D105	B-3
D106	E-12
D107	D-12
D108	D-12
D109	C-15
D110	E-4
D111	D-11
D112	D-11
D113	D-11
D121	C-4
D122	C-6
D123	C-4
D124	C-5
D125	C-6
D126	C-6
D127	C-6
D131	B-3
D132	A-3
D135	C-7
D138	A-4
D301	G-10
D401	J-7
D402	J-7
D403	J-8
D404	J-7
D451	I-7
D452	I-7
D453	I-7
D454	I-6
IC101	D-10
IC102	D-4
IC103	D-6
IC104	D-7
IC301	G-10
IC302	G-13
IC303	J-14
IC304	J-14
IC305	I-13
IC306	G-5
IC307	G-12
IC308	G-8
IC309	H-7
IC314	J-9
IC315	G-14
IC316	G-11
IC317	G-9
IC318	H-8
IC319	G-7
IC401	H-9
IC403	I-5
IC410	H-11
IC412	H-10
IC413	I-7
IC414	H-6
Q101	B-3
Q102	C-12
Q103	D-12
Q104	D-12
Q105	D-14
Q107	E-4
Q401	I-11
Q402	I-10
Q403	J-7
Q404	J-7
Q451	G-11
Q452	G-10
Q453	J-5
Q454	J-6

4-8. PRINTED WIRING BOARDS —SURROUND/DISPLAY SECTION (D911)—

• Refer to page 42 for Semiconductor Lead Layouts.

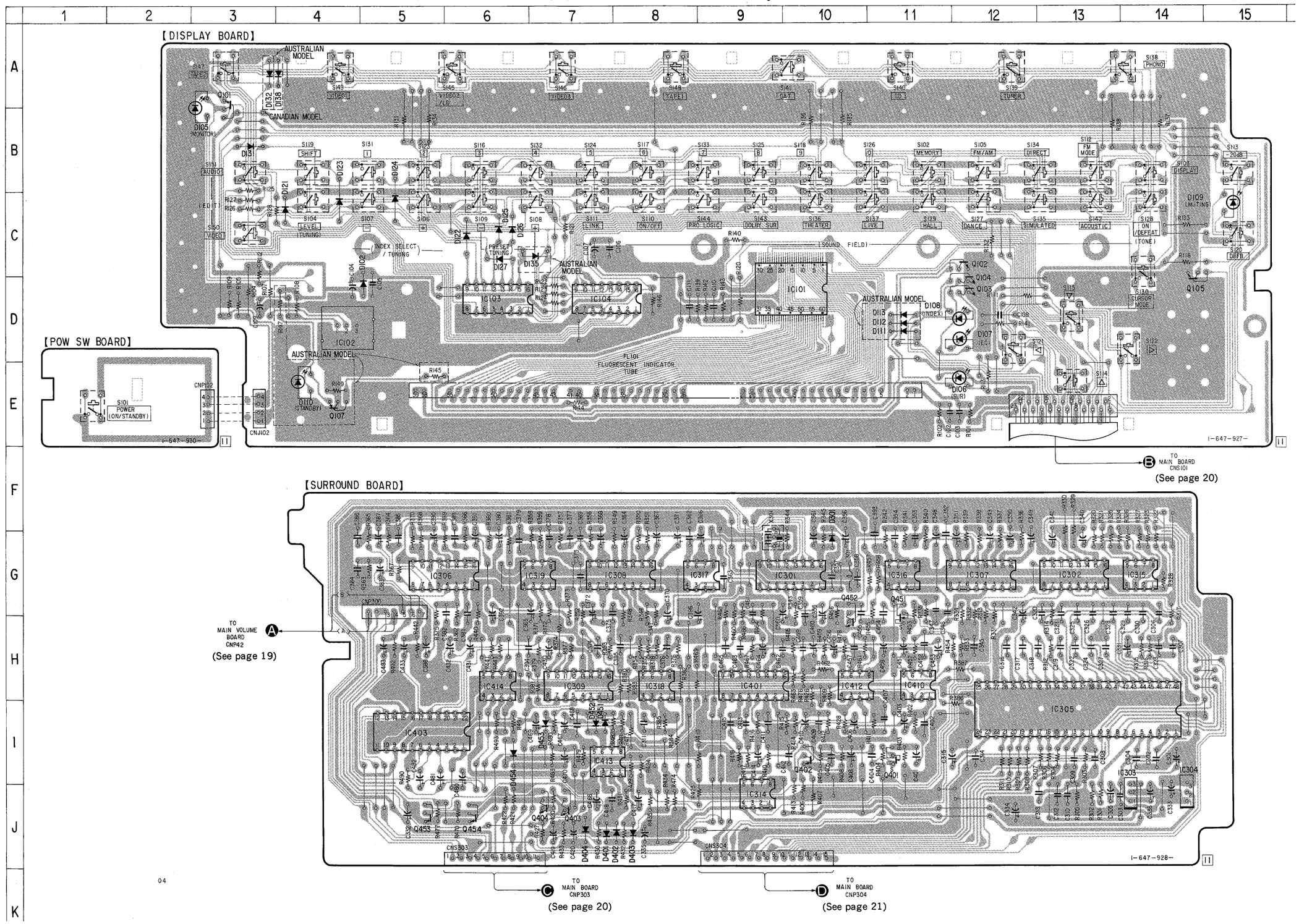

Note:

• ○—— : parts extracted from the component side.

4-9. SCHEMATIC DIAGRAM —SURROUND SECTION (D911)— • Refer to page 14 for IC Block Diagrams.

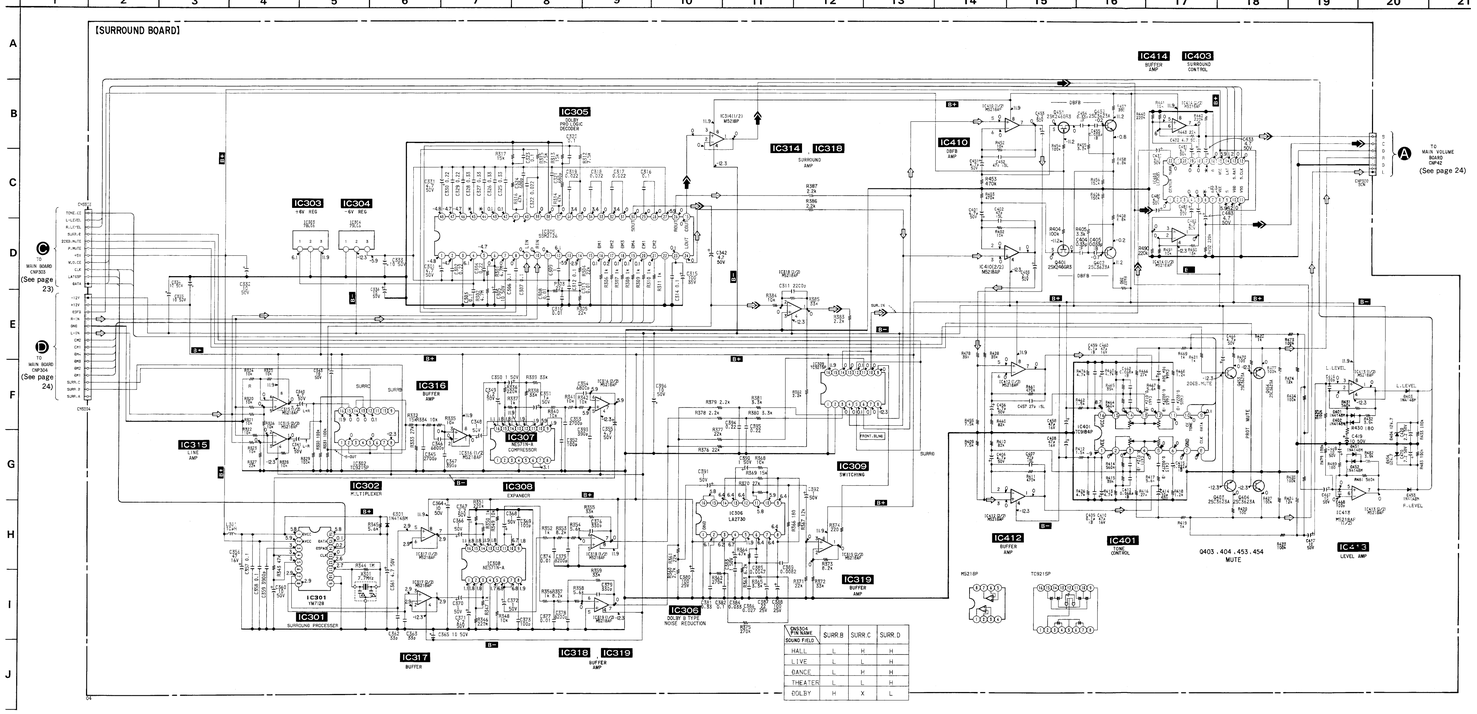

SOUND FIELD \ PIN NAME	SURR B	SURR C	SURR D
HALL	L	H	H
LIVE	L	L	H
DANCE	L	H	H
THEATER	L	L	H
DOLBY	H	X	L

4-10. SCHEMATIC DIAGRAM —DISPLAY SECTION (D911)— • Refer to page 14 for IC Block Diagrams.

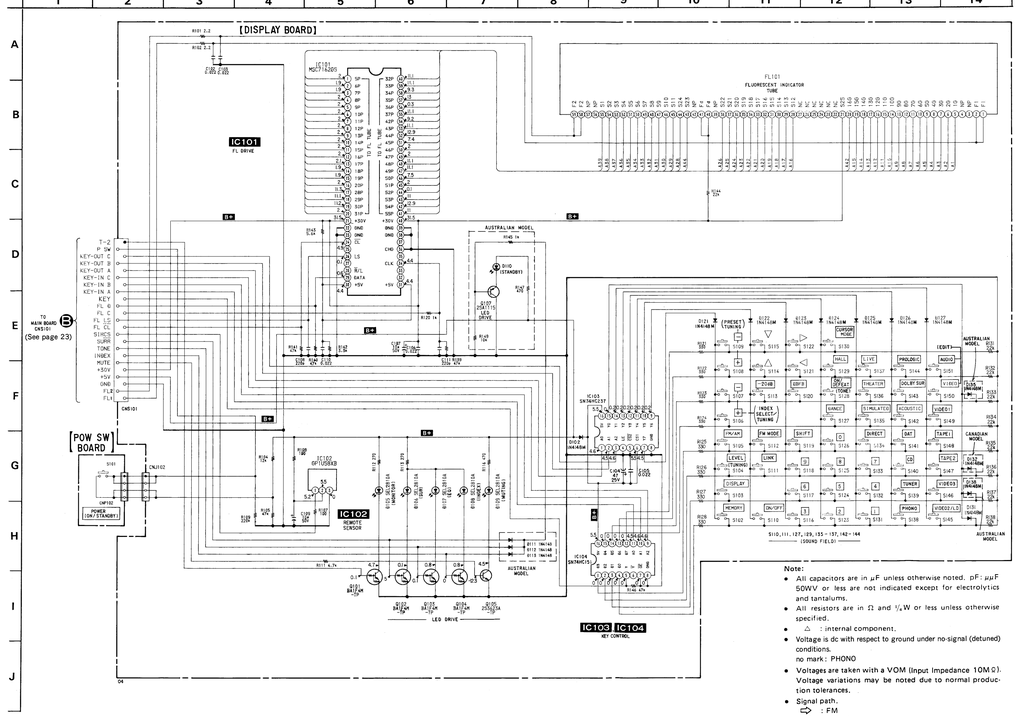

Note:

- All capacitors are in μF unless otherwise noted. pF: μμF 50WV or less are not indicated except for electrolytics and tantalums.
- All resistors are in Ω and ¼W or less unless otherwise specified.
- △ : internal component.
- Voltage is dc with respect to ground under no-signal (detuned) conditions.
  no mark : PHONO
- Voltages are taken with a VOM (Input Impedance 10MΩ). Voltage variations may be noted due to normal production tolerances.
- Signal path.
  ⇨ : FM
  ⇨ : SURROUND
  ➡ : CENTER

4-12. SEMICONDUCTOR LEAD LAYOUTS

GP1U58XB

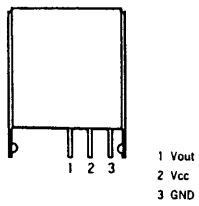

LA2730
LM3364K-15
NE571N-A
SN74HC151AN
SN74HC237AN
SN761200N
TC9184P
TC9214P
TC9215P
YM7128

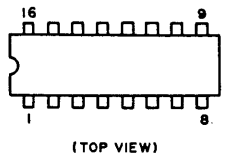

LA2780N

LB1639
M5218AP

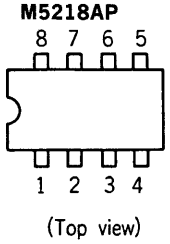

LC7535

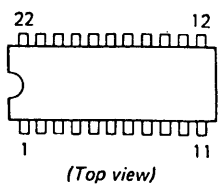

LC7822

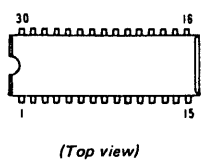

LM78M12
M5F78M05L

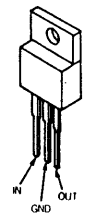

LV1000N-A

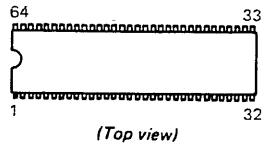

MSC7162GS-V1K

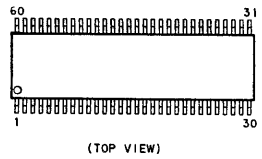

M5F79M12L

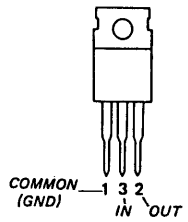

NJM78L06A

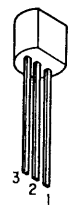

NJM79L06A

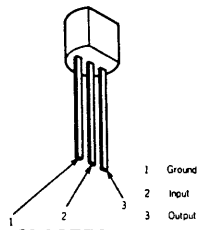

SI-18752

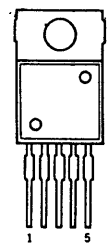

SSM-2126A

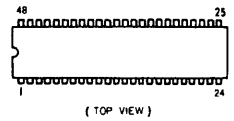

STK3102-MK3

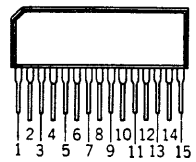

μPD75517GF-212-3B9
μPD75517GF-213-3B9

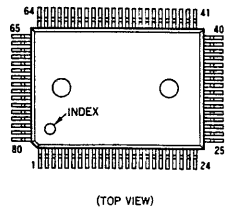

DTA124ES
2SA1175-HFE
2SC2603-EF
2SC3623A-LK

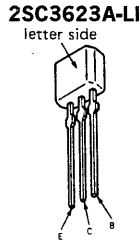

DTC124ES
2SA1221-K
2SC2785-FEK

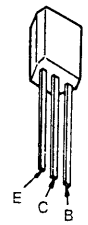

2SA979-FG

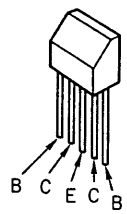

2SA988-PAFAEA

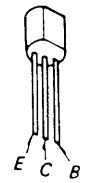

2SB1588-OPY
2SD2439-OPY

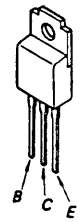

2SC1841-PAFAEA

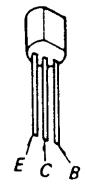

2SC2958-L
2SD774-34

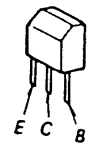

2SD2012

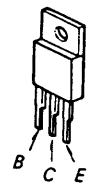

2SK246-GR3

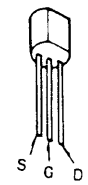

HZS30-3L
HZS6B1L
HZS6C3L
11ES2

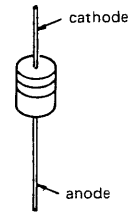

HZS4ALL
UZ-4.7BS
UZP-6.2BA
1N4148M
1S1585

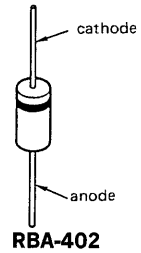

RBA-402
RBV-602-01

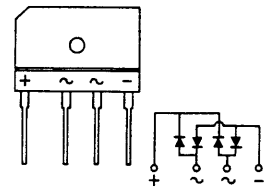

SEL2210S-CD

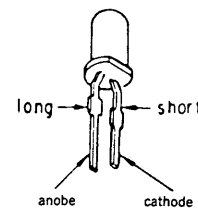

SEL2810A-CD

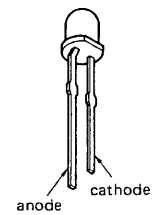

SECTION 5
EXPLODED VIEWS

NOTE:
- The mechanical parts with no reference number in the exploded views are not supplied.
- Items marked "*" are not stocked since they are seldom required for routine service. Some delay should be anticipated when ordering these items.
- -XX and -X mean standardized parts, so they may have some difference from the original one.
- Color Indication of Appearance Parts
  Example :
  KNOB, BALANCE (WHITE)... (RED)
  ↑ ↑
  Parts Color Cabinet's Color
- Hardware (# mark) list is given in the last of this parts list.

The components identified by mark ⚠ or dotted line with mark. ⚠ are critical for safety. Replace only with part number specified.

Les composants identifiés par une marque ⚠ sont critiques pour la sécurité.
Ne les remplacer que par une pièce portant le numéro spécifié.

5-1. CABINET SECTION

- Abbreviation
  AUS:Australian model

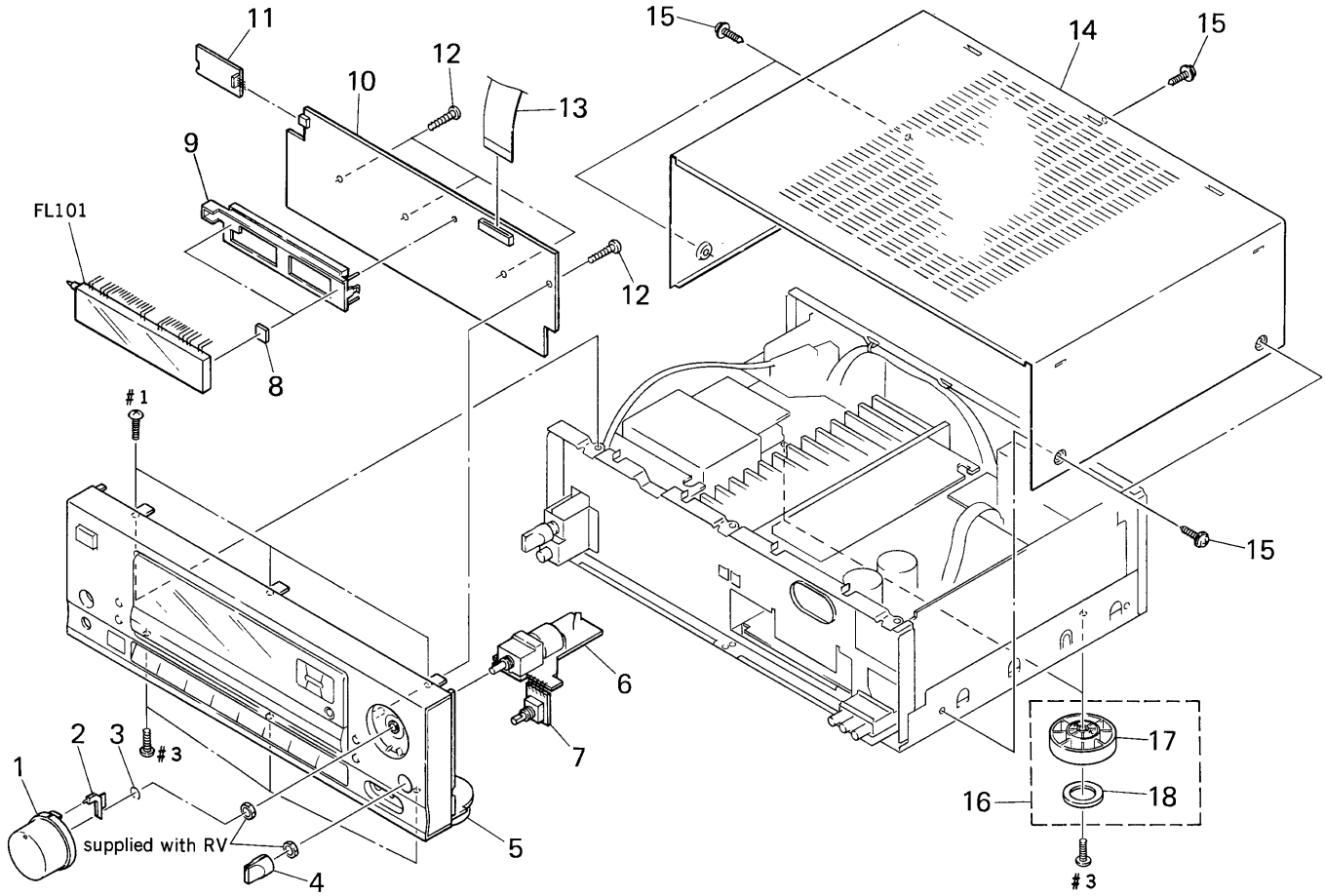

Ref. No.	Part No.	Description	Remark
1	4-949-659-01	KNOB (VOL-NEW)	
2	4-958-991-01	PLATE (VOL), LIGHT GUIDE	
3	3-350-426-01	SPRING, RING	
4	4-957-383-01	KNOB (F14)	
5	X-4943-640-1	PANEL ASSY, FRONT (D911:US, Canadian)	
5	X-4943-641-1	PANEL ASSY, FRONT (AUS)	
5	X-4943-642-1	PANEL ASSY, FRONT (D711)	
* 6	1-647-938-11	MAIN VOLUME BOARD	
* 7	1-647-939-11	BALANCE VOLUME BOARD	
* 8	4-921-941-01	CUSHION (FL)	
* 9	4-952-115-01	HOLDER, FL TUBE	
* 10	A-4360-636-A	DISPLAY BOARD, COMPLETE (D911:US)	
* 10	A-4360-637-A	DISPLAY BOARD, COMPLETE (AUS)	
* 10	A-4360-669-A	DISPLAY BOARD, COMPLETE (D711:US)	
* 10	A-4365-080-A	DISPLAY BOARD, COMPLETE (D911:Canadian)	
* 10	A-4365-081-A	DISPLAY BOARD, COMPLETE (D711:Canadian)	
* 11	1-647-930-11	POW SW BOARD (D911)	
* 11	1-647-943-11	POW SW BOARD (D711)	
12	4-951-620-01	SCREW (2.6X8), +BVTP	
* 13	1-590-499-11	WIRE, FLAT TYPE (23 CORE)	
14	4-931-031-11	CASE	
15	3-704-366-01	SCREW (CASE) (M3X8)	
16	X-4941-291-1	FOOT ASSY (F58175S) (US, Canadian)	
16	X-4941-292-1	FOOT ASSY (F58175S) (AUS)	
17	3-318-688-31	FOOT (F58175S) (AUS)	
17	3-318-688-51	FOOT (F58175S) (US, Canadian)	
18	4-923-836-11	CUSHION	
FL101	1-517-160-11	INDICATOR TUBE, FLUORESCENT	

5-2. CHASSIS SECTION

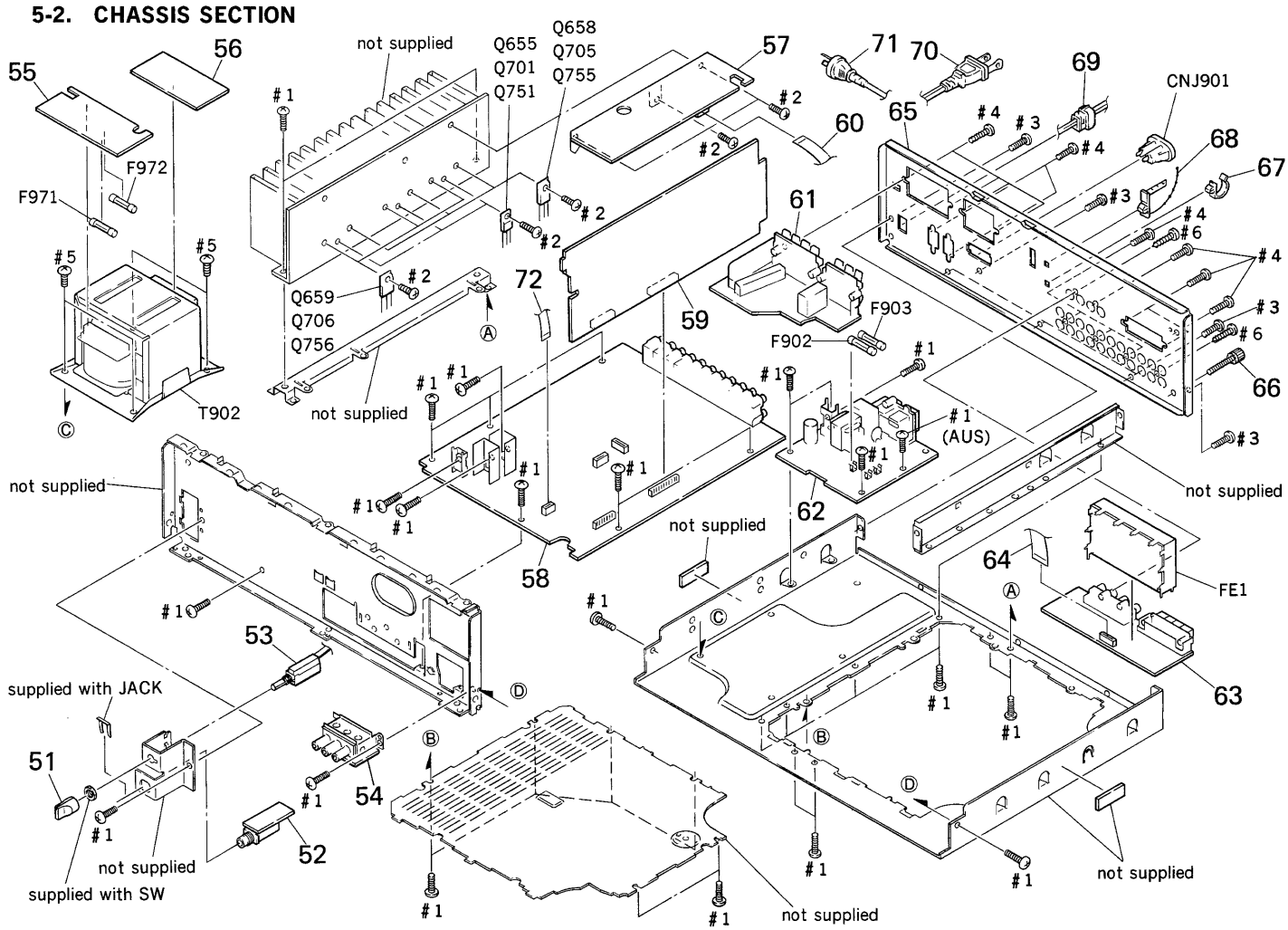

Ref. No.	Part No.	Description	Remark
51	4-957-383-01	KNOB (F14)	
* 52	1-647-934-11	HP BOARD	
53	1-572-291-41	SWITCH, ROTARY SLIDE	
* 54	1-647-929-11	VIDEO (3) BOARD (D911)	
* 55	1-647-932-11	T.T (S) BOARD (US, Canadian)	
* 55	1-647-933-11	T.T (S) BOARD (AUS)	
* 56	1-647-940-11	T.T (P) BOARD	
* 57	A-4360-652-A	SURROUND AMPLIFIER BOARD, COMPLETE (US, AUS)	
* 57	A-4360-653-A	SURROUND AMPLIFIER BOARD, COMPLETE (Canadian)	
* 58	A-4360-641-A	MAIN BOARD, COMPLETE (D911:US, AUS)	
* 58	A-4360-642-A	MAIN BOARD, COMPLETE (D911:Canadian)	
* 58	A-4360-677-A	MAIN BOARD, COMPLETE (D711:US)	
* 58	A-4360-678-A	MAIN BOARD, COMPLETE (D711:Canadian)	
* 59	A-4360-639-A	SURROUND BOARD, COMPLETE (D911)	
* 59	A-4360-670-A	SURROUND BOARD, COMPLETE (D711)	
60	1-590-033-11	WIRE, FLAT TYPE (7 CORE)	
* 61	1-647-951-11	SP-TM BOARD	
* 62	A-4360-649-A	POWER SUPPLY BOARD, COMPLETE (US, Canadian)	
* 62	A-4360-650-A	POWER SUPPLY BOARD, COMPLETE (AUS)	
* 63	1-647-936-11	TUNER/VIDEO BOARD	
64	1-690-970-11	WIRE (FLAT TYPE) (13 CORE)	
* 65	4-958-277-01	PANEL, BACK (D911:US)	
* 65	4-958-277-11	PANEL, BACK (D911:Canadian)	
* 65	4-958-277-21	PANEL, BACK (D711:US)	
* 65	4-958-277-31	PANEL, BACK (D711:Canadian)	
* 65	4-958-277-41	PANEL, BACK (AUS)	
66	4-947-010-01	SCREW, FEEDER FIXED	
* 67	4-949-235-01	HOOK (US, Canadian)	
68	4-956-370-12	BAND, PLUG FIXED (AUS)	
* 69	3-703-244-00	BUSHING (2104), CORD	
⚠70	1-690-609-11	CORD, POWER (US, Canadian)	
⚠71	1-696-848-21	CORD, POWER (AUS)	
72	1-575-662-11	WIRE, FLAT TYPE (5 CORE)	
⚠CNJ901	1-251-078-11	OUTLET, AC (AC OUTLET) (AUS)	
⚠F902	1-532-237-00	FUSE, TIME LAG (T3.15A/250V) (AUS)	
⚠F902	1-532-748-11	FUSE, GLASS TUBE (6.3A/125V) (US, Canadian)	
⚠F903	1-532-286-00	FUSE, TIME LAG (T2.5A/250V) (AUS)	
⚠F971	1-532-237-00	FUSE, TIME LAG (T3.15A/250V) (AUS)	
⚠F971	1-576-107-11	FUSE (3.15A/250V) (US, Canadian)	
⚠F972	1-532-237-00	FUSE, TIME LAG (T3.15A/250V) (AUS)	
⚠F972	1-576-107-11	FUSE (3.15A/250V) (US, Canadian)	
FE1	1-239-727-11	ENCAPSULATED COMPONENT (FCC) (US, Canadian)	
FE1	1-239-611-11	ENCAPSULATED COMPONENT (AUS)	
Q655	8-729-209-15	TRANSISTOR 2SD2012	
Q658	8-729-022-16	TRANSISTOR 2SD2390-OPY-M	
Q659	8-729-022-15	TRANSISTOR 2SB1560-OPY-M	
Q701	8-729-209-15	TRANSISTOR 2SD2012	
Q705	8-729-022-16	TRANSISTOR 2SD2390-OPY-M	
Q706	8-729-022-15	TRANSISTOR 2SB1560-OPY-M	
Q751	8-729-209-15	TRANSISTOR 2SD2012	
Q755	8-729-022-16	TRANSISTOR 2SD2390-OPY-M	
Q756	8-729-022-15	TRANSISTOR 2SB1560-OPY-M	
⚠T902	1-423-637-11	TRANSFORMER, POWER (US)	
⚠T902	1-423-638-11	TRANSFORMER, POWER (Canadian)	
⚠T902	1-423-639-11	TRANSFORMER, POWER (AUS)	

SECTION 6
ELECTRICAL PARTS LIST

BALANCE VOLUME | DISPLAY

NOTE:
- Due to standardization, replacements in the parts list may be different from the parts specified in the diagrams or the components used on the set.
- -XX and -X mean standardized parts, so they may have some difference from the original one.
- RESISTORS
  All resistors are in ohms.
  METAL:Metal-film resistor.
  METAL OXIDE: Metal oxide-film resistor.
  F:nonflammable
- Items marked "*" are not stocked since they are seldom required for routine service. Some delay should be anticipated when ordering these items.
- SEMICONDUCTORS
  In each case, u:μ, for example:
  uA..: μA.. uPA..: μPA..
  uPB..: μPB.. uPC..: μPC.. uPD..: μPD..
- CAPACITORS
  uF: μF
- COILS
  uH: μH

When indicating parts by reference number, please include the board.

The components identified by mark ⚠ or dotted line with mark. ⚠ are critical for safety. Replace only with part number specified.

Les composants identifiés par une marque ⚠ sont critiques pour la sécurité.
Ne les remplacer que par une pièce portant le numéro spécifié.

- Abbreviation
  AUS:Australian model

Ref. No.	Part No.	Description			Remark
*	1-647-939-11	BALANCE VOLUME BOARD			
		**********			
		< VARIABLE RESISTOR >			
RV502	1-238-965-21	RES, VAR, CARBON 100K/100K (BALANCE)			
**********					
*	A-4360-636-A	DISPLAY BOARD, COMPLETE (D911:US)			
*	A-4360-637-A	DISPLAY BOARD, COMPLETE (AUS)			
*	A-4360-669-A	DISPLAY BOARD, COMPLETE (D771:US)			
*	A-4365-080-A	DISPLAY BOARD, COMPLETE (D911:Canadian)			
*	A-4365-081-A	DISPLAY BOARD, COMPLETE (D711:Canadian)			
		**********			
*	4-921-941-01	CUSHION (FL)			
*	4-952-115-01	HOLDER, FL TUBE			
		< CAPACITOR >			
C102	1-164-097-11	CERAMIC	0.022uF		50V
C103	1-164-097-11	CERAMIC	0.022uF		50V
C104	1-124-477-11	ELECT	47uF	20%	25V
C105	1-161-494-00	CERAMIC	0.022uF		25V
C106	1-136-157-00	FILM	0.022uF	5%	50V
C107	1-124-907-11	ELECT	10uF	20%	50V
C108	1-162-286-31	CERAMIC	220PF	10%	50V
C109	1-124-907-11	ELECT	10uF	20%	50V
C110	1-161-494-00	CERAMIC	0.022uF		25V
C111	1-162-286-31	CERAMIC	220PF	10%	50V
		< JACK >			
* CNJ102	1-565-480-11	CONNECTOR, BOARD TO BOARD 4P			
* CNS101	1-568-865-11	SOCKET, CONNECTOR 23P			
		< DIODE >			
D102	8-719-987-63	DIODE	1N4148M		
D105	8-719-301-49	LED	SEL2810A-CD (MONITOR)		
D106	8-719-301-49	LED	SEL2810A-CD (SUR)		
D107	8-719-301-49	LED	SEL2810A-CD (EQ)		
D108	8-719-301-49	LED	SEL2810A-CD (INDEX)		
D109	8-719-301-49	LED	SEL2810A-CD (MUTING)		
D110	8-719-301-37	LED	SEL2210S-CD (STANDBY) (AUS)		
D111	8-719-987-63	DIODE	1N4148M (AUS)		
D112	8-719-987-63	DIODE	1N4148M (AUS)		
D113	8-719-987-63	DIODE	1N4148M (AUS)		
D121	8-719-987-63	DIODE	1N4148M		
D122	8-719-987-63	DIODE	1N4148M		
D123	8-719-987-63	DIODE	1N4148M		
D124	8-719-987-63	DIODE	1N4148M		
D125	8-719-987-63	DIODE	1N4148M		
D126	8-719-987-63	DIODE	1N4148M		
D127	8-719-987-63	DIODE	1N4148M		
D131	8-719-987-63	DIODE	1N4148M (D911)		
D132	8-719-987-63	DIODE	1N4148M (Canadian)		
D135	8-719-987-63	DIODE	1N4148M (AUS)		
D138	8-719-987-63	DIODE	1N4148M (AUS)		
		< FLUORESCENT INDICATOR >			
FL101	1-517-160-11	INDICATOR TUBE, FLUORESCENT			
		< IC >			
IC101	8-759-512-46	IC	MSC7162GS-V1K		
IC102	8-749-923-11	IC	GP1U58XB		
IC103	8-759-921-32	IC	SN74HC237AN		
IC104	8-759-916-48	IC	SN74HC151AN		
		< TRANSISTOR >			
Q101-104	8-729-900-36	TRANSISTOR	DTC124ES		
Q105	8-729-141-30	TRANSISTOR	2SC3623A-LK		
Q107	8-729-119-76	TRANSISTOR	2SA1175-HFE (AUS)		
		< RESISTOR >			
R101	1-249-385-11	CARBON	2.2	5%	1/6W
R102	1-249-385-11	CARBON	2.2	5%	1/6W
R104	1-249-430-11	CARBON	12K	5%	1/4W
R105	1-249-437-11	CARBON	47K	5%	1/4W
R107	1-249-405-11	CARBON	100	5%	1/4W
R108	1-249-405-11	CARBON	100	5%	1/4W
R109	1-247-887-00	CARBON	220K	5%	1/4W
R111	1-249-425-11	CARBON	4.7K	5%	1/4W
R112	1-249-410-11	CARBON	270	5%	1/4W

Ref. No.	Part No.	Description				Remark
R113	1-249-410-11	CARBON	270	5%	1/4W	
R116	1-249-413-11	CARBON	470	5%	1/4W	
R120	1-249-417-11	CARBON	1K	5%	1/4W	
R121-128						
	1-249-411-11	CARBON	330	5%	1/4W	
R131-138						
	1-249-433-11	CARBON	22K	5%	1/4W	
R139-141						
	1-249-437-11	CARBON	47K	5%	1/4W	
R142	1-249-423-11	CARBON	3.3K	5%	1/4W	
R143	1-249-426-11	CARBON	5.6K	5%	1/4W	
R144	1-249-433-11	CARBON	22K	5%	1/4W	
R145	1-249-417-11	CARBON	1K	5%	1/4W	(AUS)
R146	1-249-437-11	CARBON	47K	5%	1/4W	
R147	1-249-413-11	CARBON	470	5%	1/4W	(AUS)
R149	1-249-429-11	CARBON	10K	5%	1/4W	(AUS)

< SWITCH >

S102	1-554-303-21	SWITCH, TACTILE (MEMORY)
S103	1-554-303-21	SWITCH, TACTILE (DISPLAY)
S104	1-554-303-21	SWITCH, TACTILE (LEVEL(TUNING))
S105	1-554-303-21	SWITCH, TACTILE (FM/AM)
S106	1-554-303-21	SWITCH, TACTILE (+(INDEX SELECT/TUNING))
S107	1-554-303-21	SWITCH, TACTILE (-(INDEX SELECT/TUNING))
S108	1-554-303-21	SWITCH, TACTILE (+(PRESET TUNING))
S109	1-554-303-21	SWITCH, TACTILE (-(PRESET TUNING))
S110	1-554-303-21	SWITCH, TACTILE (ON/OFF(SOUND FIELD))
S111	1-554-303-21	SWITCH, TACTILE (LINK(SOUND FIELD))
S112	1-554-303-21	SWITCH, TACTILE (FM MODE)
S113	1-554-303-21	SWITCH, TACTILE (-20dB)
S114	1-554-303-21	SWITCH, TACTILE (△)
S115	1-554-303-21	SWITCH, TACTILE (▽)
S116	1-554-303-21	SWITCH, TACTILE (3)
S117	1-554-303-21	SWITCH, TACTILE (6)
S118	1-554-303-21	SWITCH, TACTILE (9)
S119	1-554-303-21	SWITCH, TACTILE (SHIFT)
S120	1-554-303-21	SWITCH, TACTILE (DBFB)
S121	1-554-303-21	SWITCH, TACTILE (◁)
S122	1-554-303-21	SWITCH, TACTILE (▷)
S123	1-554-303-21	SWITCH, TACTILE (2)
S124	1-554-303-21	SWITCH, TACTILE (5)
S125	1-554-303-21	SWITCH, TACTILE (8)
S126	1-554-303-21	SWITCH, TACTILE (0)
S127	1-554-303-21	SWITCH, TACTILE (DANCE(SOUND FIELD))
S128	1-554-303-21	SWITCH, TACTILE (ON/DEFEAT(TONE))
S129	1-554-303-21	SWITCH, TACTILE (HALL(SOUND FIELD))
S130	1-554-303-21	SWITCH, TACTILE (CORSOR MODE)
S131	1-554-303-21	SWITCH, TACTILE (1)
S132	1-554-303-21	SWITCH, TACTILE (4)
S133	1-554-303-21	SWITCH, TACTILE (7)
S134	1-554-303-21	SWITCH, TACTILE (DIRECT)
S135	1-554-303-21	SWITCH, TACTILE (SIMULATED(SOUND FIELD))
S136	1-554-303-21	SWITCH, TACTILE (THEATER(SOUND FIELD))
S137	1-554-303-21	SWITCH, TACTILE (LIVE(SOUND FIELD))
S138	1-554-303-21	SWITCH, TACTILE (PHONO)
S139	1-554-303-21	SWITCH, TACTILE (TUNER)
S140	1-554-303-21	SWITCH, TACTILE (CD)
S141	1-554-303-21	SWITCH, TACTILE (DAT)
S142	1-554-303-21	SWITCH, TACTILE (ACOUSTIC(SOUND FIELD))
S143	1-554-303-21	SWITCH, TACTILE (DOLBY SUR(SOUND FIELD))
S144	1-554-303-21	SWITCH, TACTILE (PROLOGIC(SOUND FIELD))
S145	1-554-303-21	SWITCH, TACTILE (VIDEO 1(D711)) (VIDEO 2/LD(D911))
S146	1-554-303-21	SWITCH, TACTILE (VIDEO 2/LD(D711)) (VIDEO 3(D911))
S147	1-554-303-21	SWITCH, TACTILE (TAPE 2) (D911)
S148	1-554-303-21	SWITCH, TACTILE (TAPE 1)
S149	1-554-303-21	SWITCH, TACTILE (TAPE 2(D711)) (VIDEO 1(D911))
S150	1-554-303-21	SWITCH, TACTILE (VIDEO (EDIT)) (D911)
S151	1-554-303-21	SWITCH, TACTILE (AUDIO (EDIT))

****

*	1-647-934-11	HP BOARD

****

< JACK >

J700	1-568-151-11	JACK (LARGE TYPE) (HEADPHONES)

****

*	A-4360-641-A	MAIN BOARD, COMPLETE (D911:US,AUS)
*	A-4360-642-A	MAIN BOARD, COMPLETE (D911:Canadian)
*	A-4360-677-A	MAIN BOARD, COMPLETE (D711:US)
*	A-4360-678-A	MAIN BOARD, COMPLETE (D711:Canadian)

****

*	4-942-204-01	PLATE, GROUND
	7-682-548-04	SCREW +BVTT 3X8 (S)

< CAPACITOR >

C201	1-164-097-11	CERAMIC	0.022uF		50V
C202	1-124-477-11	ELECT	47uF	20%	25V
C203	1-164-097-11	CERAMIC	0.022uF		50V
C204	1-124-903-11	ELECT	1uF	20%	50V
C206	1-104-905-11	CAP, DOUBLE LAYERS 0.22F			5.5V
C207	1-164-097-11	CERAMIC	0.022uF		50V
C208	1-124-925-11	ELECT	2.2uF	20%	100V
C209	1-164-097-11	CERAMIC	0.022uF		50V
C210	1-124-907-11	ELECT	10uF	20%	50V
C211	1-164-097-11	CERAMIC	0.022uF		50V

MAIN

Ref. No.	Part No.	Description			Remark
C214	1-161-494-00	CERAMIC	0.022uF		25V
C215	1-161-494-00	CERAMIC	0.022uF		25V
C501	1-162-282-31	CERAMIC	100PF	10%	50V
C502	1-124-927-11	ELECT	4.7uF	20%	100V
C503	1-162-282-31	CERAMIC	100PF	10%	50V
C504	1-124-477-11	ELECT	47uF	20%	25V
C505	1-130-480-00	MYLAR	0.0056uF	5%	50V
C506	1-130-473-00	MYLAR	0.0015uF	5%	50V
C507	1-124-903-11	ELECT	1uF	20%	50V
C508	1-124-477-11	ELECT	47uF	20%	25V
C510	1-124-927-11	ELECT	4.7uF	20%	100V
C530	1-162-294-31	CERAMIC	0.001uF	10%	50V
C532	1-124-927-11	ELECT	4.7uF	20%	100V
C540	1-124-907-11	ELECT	10uF	20%	50V
C541	1-124-464-11	ELECT	0.22uF	20%	50V
C551	1-162-282-31	CERAMIC	100PF	10%	50V
C552	1-124-927-11	ELECT	4.7uF	20%	100V
C553	1-162-282-31	CERAMIC	100PF	10%	50V
C554	1-124-477-11	ELECT	47uF	20%	25V
C555	1-130-480-00	MYLAR	0.0056uF	5%	50V
C556	1-130-473-00	MYLAR	0.0015uF	5%	50V
C557	1-124-903-11	ELECT	1uF	20%	50V
C558	1-124-477-11	ELECT	47uF	20%	25V
C560	1-124-927-11	ELECT	4.7uF	20%	100V
C651	1-124-927-11	ELECT	4.7uF	20%	100V
C652	1-162-288-31	CERAMIC	330PF	10%	50V
C654	1-162-292-31	CERAMIC	680PF	10%	50V
C655	1-161-959-00	CERAMIC	22PF	10%	500V
C656	1-102-230-00	CERAMIC	4PF	0.25PF	500V
C657	1-124-443-00	ELECT	100uF	20%	10V
C658	1-124-910-11	ELECT	47uF	20%	50V
C659-661					
	1-161-959-00	CERAMIC	22PF	10%	500V
C662	1-136-165-00	FILM	0.1uF	5%	50V
C663	1-130-487-00	MYLAR (US, AUS)	0.022uF	5%	50V
C663	1-130-491-00	MYLAR (Canadian)	0.047uF	5%	50V
C664	1-130-491-00	MYLAR (Canadian)	0.047uF	5%	50V
C667	1-136-165-00	FILM	0.1uF	5%	50V
C701	1-124-927-11	ELECT	4.7uF	20%	100V
C702	1-162-288-31	CERAMIC	330PF	10%	50V
C703	1-102-989-00	CERAMIC	68PF	5%	500V
C704	1-102-989-00	CERAMIC	68PF	5%	500V
C705	1-124-916-11	ELECT	22uF	20%	63V
C706	1-124-443-00	ELECT	100uF	20%	10V
C707	1-102-230-00	CERAMIC	4PF	0.25PF	500V
C708	1-124-910-11	ELECT	47uF	20%	50V

Ref. No.	Part No.	Description			Remark
C709	1-161-959-00	CERAMIC	22PF	10%	500V
C710	1-161-959-00	CERAMIC	22PF	10%	500V
C711	1-136-165-00	FILM	0.1uF	5%	50V
C712	1-136-165-00	FILM	0.1uF	5%	50V
C713	1-130-487-00	MYLAR (US, AUS)	0.022uF	5%	50V
C713	1-130-491-00	MYLAR (Canadian)	0.047uF	5%	50V
C714	1-130-491-00	MYLAR (Canadian)	0.047uF	5%	50V
C721	1-136-169-00	FILM	0.22uF	5%	50V
C722	1-124-471-00	ELECT	1000uF	20%	6.3V
C751	1-124-927-11	ELECT	4.7uF	20%	100V
C752	1-162-288-31	CERAMIC	330PF	10%	50V
C753	1-102-989-00	CERAMIC	68PF	5%	500V
C754	1-102-989-00	CERAMIC	68PF	5%	500V
C755	1-124-916-11	ELECT	22uF	20%	63V
C756	1-124-443-00	ELECT	100uF	20%	10V
C757	1-102-230-00	CERAMIC	4PF	0.25PF	500V
C758	1-124-910-11	ELECT	47uF	20%	50V
C759	1-161-959-00	CERAMIC	22PF	10%	500V
C760	1-161-959-00	CERAMIC	22PF	10%	500V
C761	1-136-165-00	FILM	0.1uF	5%	50V
C762	1-136-165-00	FILM	0.1uF	5%	50V
C763	1-130-487-00	MYLAR (US, AUS)	0.022uF	5%	50V
C763	1-130-491-00	MYLAR (Canadian)	0.047uF	5%	50V
C764	1-130-491-00	MYLAR (Canadian)	0.047uF	5%	50V
C971	1-125-729-11	ELECT	10000uF	20%	63V
C972	1-125-729-11	ELECT	10000uF	20%	63V
C973	1-164-097-11	CERAMIC	0.022uF		50V
C974	1-164-097-11	CERAMIC	0.022uF		50V
C975	1-124-618-11	ELECT	2200uF	20%	35V
C976	1-126-952-11	ELECT	1000uF	20%	35V
C979	1-124-477-11	ELECT	47uF	20%	25V
C980	1-124-477-11	ELECT	47uF	20%	25V
C981	1-124-472-11	ELECT	470uF	20%	10V
C982	1-124-907-11	ELECT	10uF	20%	50V
C983	1-124-907-11	ELECT	10uF	20%	50V
C985	1-124-903-11	ELECT	1uF	20%	50V

< VIBRATOR >

CF201	1-577-101-11	VIBRATOR, CERAMIC	

< JACK >

CNJ502	1-695-188-21	JACK, PIN 4P (PHONO/CD)
CNJ503	1-580-825-11	JACK, PIN 6P (DAT/TAPE 1)

Ref. No.	Part No.	Description	Remark
CNJ504	1-580-825-11	JACK, PIN 6P (TAPE 1/VIDEO 2/LD/ VIDEO 1)	
CNJ505	1-580-825-11	JACK, PIN 6P (VIDEO 1/TAPE 2)	
		< CONNECTOR >	
* CNP12	1-564-505-11	PLUG, CONNECTOR 2P (D911)	
* CNP22	1-564-506-11	PLUG, CONNECTOR 3P (D911)	
* CNP54	1-564-509-11	PLUG, CONNECTOR 6P	
* CNP101	1-564-506-11	PLUG, CONNECTOR 3P	
CNP303	1-691-168-11	PIN, CONNECTOR 11P	
CNP304	1-691-172-11	PIN, CONNECTOR 15P	
* CNP804	1-568-826-11	SOCKET, CONNECTOR 7P	
* CNP904	1-564-507-11	PLUG, CONNECTOR 4P	
* CNS14	1-564-506-11	PLUG, CONNECTOR 3P	
* CNS58	1-564-506-11	PLUG, CONNECTOR 3P	
* CNS101	1-568-839-11	SOCKET, CONNECTOR 23P	
* CNS110	1-568-832-11	SOCKET, CONNECTOR 13P	
* CNS206	1-568-824-11	SOCKET, CONNECTOR 5P	
		< DIODE >	
D101	8-719-014-76	DIODE UZP-6.2BA	
D202	8-719-987-63	DIODE 1N4148M	
D203	8-719-987-63	DIODE 1N4148M	
D204	8-719-987-63	DIODE 1N4148M	
D205	8-719-987-63	DIODE 1N4148M	
D540	8-719-987-63	DIODE 1N4148M	
D541	8-719-987-63	DIODE 1N4148M	
D542	8-719-987-63	DIODE 1N4148M	
D651	8-719-987-63	DIODE 1N4148M	
D652	8-719-815-85	DIODE 1S1585	
D653	8-719-815-85	DIODE 1S1585	
D654	8-719-933-36	DIODE HZS6B1L	
D703	8-719-815-85	DIODE 1S1585	
D704	8-719-815-85	DIODE 1S1585	
D705	8-719-987-63	DIODE 1N4148M	
D706	8-719-987-63	DIODE 1N4148M	
D753	8-719-815-85	DIODE 1S1585	
D754	8-719-815-85	DIODE 1S1585	
D910	8-719-987-63	DIODE 1N4148M	
D911	8-719-987-63	DIODE 1N4148M	
D974	8-719-934-23	DIODE HZS30-3L	
D978	8-719-200-82	DIODE 11ES2	
D979	8-719-200-82	DIODE 11ES2	
D980	8-719-200-82	DIODE 11ES2	
D981	8-719-200-82	DIODE 11ES2	
		< IC >	
IC201	8-759-820-62	IC LB1639	
IC202	8-759-182-60	IC uPD75517GF-213-3B9 (D711)	
IC202	8-759-182-59	IC uPD75517GF-212-3B9 (D911)	
IC350	8-759-634-51	IC M5218AP (D911)	
IC501	8-759-634-51	IC M5218AP	
IC502	8-759-805-14	IC LC7822	
IC503	8-759-805-14	IC LC7822	
IC701	8-749-920-70	IC STK3102-MK3	
IC971	8-759-501-47	IC LM78M12	
IC972	8-759-604-45	IC M5F79M12L	
IC973	8-759-604-35	IC M5F78M05L	
		< COIL >	
L201	1-410-521-11	INDUCTOR 100uH	
L651	1-420-872-00	COIL, AIR CORE	
L701	1-420-872-00	COIL, AIR CORE	
L751	1-420-872-00	COIL, AIR CORE	
		< TRANSISTOR >	
Q201	8-729-900-63	TRANSISTOR DTA124ES	
Q202	8-729-119-79	TRANSISTOR 2SC2785-FEK	
Q210-213	8-729-900-63	TRANSISTOR DTA124ES	
Q531	8-729-141-30	TRANSISTOR 2SC3623A-LK	
Q532	8-729-900-36	TRANSISTOR DTC124ES	
Q581	8-729-141-30	TRANSISTOR 2SC3623A-LK	
Q651	8-729-119-79	TRANSISTOR 2SC2785-FEK	
Q652	8-729-140-82	TRANSISTOR 2SA988-PAFAEA	
Q653	8-729-119-79	TRANSISTOR 2SC2785-FEK	
Q654	8-729-122-13	TRANSISTOR 2SA1221-K	
Q656	8-729-195-82	TRANSISTOR 2SC2958-L	
Q661	8-729-140-82	TRANSISTOR 2SA988-PAFAEA	
Q662	8-729-140-82	TRANSISTOR 2SA988-PAFAEA	
Q663	8-729-620-18	TRANSISTOR 2SA979-FG	
Q707	8-729-140-82	TRANSISTOR 2SA988-PAFAEA	
Q708	8-729-140-82	TRANSISTOR 2SA988-PAFAEA	
Q719	8-729-119-79	TRANSISTOR 2SC2785-FEK	
Q721	8-729-140-84	TRANSISTOR 2SC1841-PAFAEA	
Q722	8-729-119-79	TRANSISTOR 2SC2785-FEK	
Q723	8-729-119-79	TRANSISTOR 2SC2785-FEK	
Q757	8-729-140-82	TRANSISTOR 2SA988-PAFAEA	
Q758	8-729-140-82	TRANSISTOR 2SA988-PAFAEA	
Q971	8-729-140-96	TRANSISTOR 2SD774-34	
		< RESISTOR >	
R201	1-249-437-11	CARBON 47K 5% 1/4W	
R202	1-249-437-11	CARBON 47K 5% 1/4W	
R203	1-249-405-11	CARBON 100 5% 1/4W	
R206-208	1-249-429-11	CARBON 10K 5% 1/4W	
R209	1-249-425-11	CARBON 4.7K 5% 1/4W	

MAIN

Ref. No.	Part No.	Description				Remark
R210	1-249-437-11	CARBON	47K	5%	1/4W	
R211	1-249-421-11	CARBON	2.2K	5%	1/4W	
R212	1-249-437-11	CARBON	47K	5%	1/4W	
R213	1-249-423-11	CARBON	3.3K	5%	1/4W	
R214	1-249-433-11	CARBON	22K	5%	1/4W	
R216-222						
	1-249-429-11	CARBON	10K	5%	1/4W	
R223-227						
	1-249-421-11	CARBON	2.2K	5%	1/4W	
R228	1-249-429-11	CARBON	10K	5%	1/4W	
R230-233						
	1-249-421-11	CARBON	2.2K	5%	1/4W	
R234	1-249-417-11	CARBON	1K	5%	1/4W	
R235	1-249-417-11	CARBON	1K	5%	1/4W	
R244-247						
	1-249-437-11	CARBON	47K	5%	1/4W	
R501	1-249-411-11	CARBON	330	5%	1/4W	
R502	1-249-441-11	CARBON	100K	5%	1/4W	
R503	1-249-441-11	CARBON	100K	5%	1/4W	
R504	1-249-416-11	CARBON	820	5%	1/4W	
R505	1-247-897-11	CARBON	560K	5%	1/4W	
R506	1-249-437-11	CARBON	47K	5%	1/4W	
R507	1-249-441-11	CARBON	100K	5%	1/4W	
R508	1-249-409-11	CARBON	220	5%	1/4W	
R509-518						
	1-249-417-11	CARBON	1K	5%	1/4W	
R519	1-249-437-11	CARBON	47K	5%	1/4W	
R520	1-249-441-11	CARBON	100K	5%	1/4W	(D911)
R530	1-249-425-11	CARBON	4.7K	5%	1/4W	
R532	1-249-405-11	CARBON	100	5%	1/4W	
R533	1-249-421-11	CARBON	2.2K	5%	1/4W	
R540	1-249-429-11	CARBON	10K	5%	1/4W	
R541	1-247-903-00	CARBON	1M	5%	1/4W	
R542	1-249-433-11	CARBON	22K	5%	1/4W	
R543	1-249-433-11	CARBON	22K	5%	1/4W	
R544	1-249-415-11	CARBON	680	5%	1/4W	
R545	1-249-437-11	CARBON	47K	5%	1/4W	
R551	1-249-411-11	CARBON	330	5%	1/4W	
R552	1-249-441-11	CARBON	100K	5%	1/4W	
R553	1-249-441-11	CARBON	100K	5%	1/4W	
R554	1-249-416-11	CARBON	820	5%	1/4W	
R555	1-247-897-11	CARBON	560K	5%	1/4W	
R556	1-249-437-11	CARBON	47K	5%	1/4W	
R557	1-249-441-11	CARBON	100K	5%	1/4W	
R558	1-249-409-11	CARBON	220	5%	1/4W	
R559-568						
	1-249-417-11	CARBON	1K	5%	1/4W	
R569	1-249-437-11	CARBON	47K	5%	1/4W	
R570	1-249-441-11	CARBON	100K	5%	1/4W	(D911)
R582	1-249-405-11	CARBON	100	5%	1/4W	

Ref. No.	Part No.	Description				Remark
R595	1-249-437-11	CARBON	47K	5%	1/4W	
R644	1-247-891-00	CARBON	330K	5%	1/4W	
R651	1-249-438-11	CARBON	56K	5%	1/4W	
R652	1-249-421-11	CARBON	2.2K	5%	1/4W	
R653	1-249-417-11	CARBON	1K	5%	1/4W	
⚠R654	1-249-409-11	CARBON	220	5%	1/4W	F
R656	1-249-425-11	CARBON	4.7K	5%	1/4W	
R657	1-249-435-11	CARBON	33K	5%	1/4W	
R658	1-249-411-11	CARBON	330	5%	1/4W	
⚠R659	1-249-409-11	CARBON	220	5%	1/4W	F
R660	1-249-433-11	CARBON	22K	5%	1/4W	
R661	1-249-438-11	CARBON	56K	5%	1/4W	
R662	1-249-414-11	CARBON	560	5%	1/4W	
R663	1-249-417-11	CARBON	1K	5%	1/4W	
⚠R664	1-249-393-11	CARBON	10	5%	1/4W	F
R667	1-247-820-11	CARBON	360	5%	1/4W	
⚠R668	1-249-393-11	CARBON	10	5%	1/4W	F
⚠R669	1-249-397-11	CARBON	22	5%	1/4W	F
R671	1-249-425-11	CARBON	4.7K	5%	1/4W	
⚠R672	1-217-151-00	METAL PLATE	0.22		2W	F
⚠R673	1-217-151-00	METAL PLATE	0.22		2W	F
R674	1-249-425-11	CARBON	4.7K	5%	1/4W	
R675	1-249-431-11	CARBON	15K	5%	1/4W	
R676	1-249-431-11	CARBON	15K	5%	1/4W	
R677	1-260-072-11	CARBON	4.7	5%	1/2W	
R678	1-249-433-11	CARBON	22K	5%	1/4W	
R679	1-260-076-11	CARBON	10	5%	1/2W	
R680	1-249-426-11	CARBON	5.6K	5%	1/4W	
⚠R681	1-249-397-11	CARBON	22	5%	1/4W	F
R701	1-249-417-11	CARBON	1K	5%	1/4W	
R702	1-249-438-11	CARBON	56K	5%	1/4W	
R703	1-249-413-11	CARBON	470	5%	1/4W	
⚠R704	1-249-401-11	CARBON	47	5%	1/4W	F
R705	1-249-413-11	CARBON	470	5%	1/4W	
R706	1-249-438-11	CARBON	56K	5%	1/4W	
R707	1-247-830-11	CARBON	910	5%	1/4W	
R708	1-249-411-11	CARBON	330	5%	1/4W	
⚠R709	1-249-393-11	CARBON	10	5%	1/4W	F
⚠R710	1-249-393-11	CARBON	10	5%	1/4W	F
⚠R715	1-217-151-00	METAL PLATE	0.22		2W	F
⚠R716	1-217-151-00	METAL PLATE	0.22		2W	F
R717	1-249-425-11	CARBON	4.7K	5%	1/4W	
R718	1-249-431-11	CARBON	15K	5%	1/4W	
R719	1-249-425-11	CARBON	4.7K	5%	1/4W	
R720	1-249-431-11	CARBON	15K	5%	1/4W	
R721	1-260-072-11	CARBON	4.7	5%	1/2W	
R722	1-260-076-11	CARBON	10	5%	1/2W	
R725	1-249-417-11	CARBON	1K	5%	1/4W	
R726	1-249-429-11	CARBON	10K	5%	1/4W	

The components identified by mark ⚠ or dotted line with mark. ⚠ are critical for safety. Replace only with part number specified.	Les composants identifiés par une marque ⚠ sont critiques pour la sécurité. Ne les remplacer que par une pièce portant le numéro spécifié.

Ref. No.	Part No.	Description				Remark
R727	1-249-439-11	CARBON	68K	5%	1/4W	
R728	1-249-436-11	CARBON	39K	5%	1/4W	
R729	1-249-434-11	CARBON	27K	5%	1/4W	
R730	1-249-433-11	CARBON	22K	5%	1/4W	
R731	1-249-437-11	CARBON	47K	5%	1/4W	
R751	1-249-417-11	CARBON	1K	5%	1/4W	
R752	1-249-438-11	CARBON	56K	5%	1/4W	
R753	1-249-413-11	CARBON	470	5%	1/4W	
⚠R754	1-249-401-11	CARBON	47	5%	1/4W	F
R755	1-249-413-11	CARBON	470	5%	1/4W	
R756	1-249-438-11	CARBON	56K	5%	1/4W	
R757	1-247-830-11	CARBON	910	5%	1/4W	
R758	1-249-411-11	CARBON	330	5%	1/4W	
⚠R759	1-249-393-11	CARBON	10	5%	1/4W	F
⚠R760	1-249-393-11	CARBON	10	5%	1/4W	F
⚠R765	1-217-151-00	METAL PLATE	0.22		2W	F
⚠R766	1-217-151-00	METAL PLATE	0.22		2W	F
R767	1-249-425-11	CARBON	4.7K	5%	1/4W	
R768	1-249-431-11	CARBON	15K	5%	1/4W	
R769	1-249-425-11	CARBON	4.7K	5%	1/4W	
R770	1-249-431-11	CARBON	15K	5%	1/4W	
R771	1-260-072-11	CARBON	4.7	5%	1/2W	
R772	1-260-076-11	CARBON	10	5%	1/2W	
R910	1-249-425-11	CARBON	4.7K	5%	1/4W	
R911	1-249-425-11	CARBON	4.7K	5%	1/4W	
⚠R971	1-215-906-11	METAL OXIDE	15	5%	3W	F
⚠R972	1-215-909-11	METAL OXIDE	47	5%	3W	F
⚠R973	1-215-910-00	METAL OXIDE	68	5%	3W	F
⚠R975	1-249-409-11	CARBON	220	5%	1/4W	F
R976	1-249-426-11	CARBON	5.6K	5%	1/4W	

< RELAY >

RY541	1-515-614-11	RELAY
RY701	1-515-765-11	RELAY

****

* 1-647-938-11 MAIN VOLUME BOARD

****

< CAPACITOR >

C598	1-124-903-11	ELECT	1uF	20%	50V
C599	1-124-903-11	ELECT	1uF	20%	50V

< CONNECTOR >

* CNJ206	1-568-824-11	SOCKET, CONNECTOR 5P
* CNP14	1-564-509-11	PLUG, CONNECTOR 6P
* CNP42	1-564-509-11	PLUG, CONNECTOR 6P

Ref. No.	Part No.	Description				Remark

< RESISTOR >

R599	1-247-816-11	CARBON	240	5%	1/4W

< VARIABLE RESISTOR >

RV503	1-241-816-11	RES, VAR, CARBON 100KX4 (MASTER VOLUME)

****

*	1-647-930-11	POW SW BOARD (D911)
*	1-647-943-11	POW SW BOARD (D711)

****

< CONNECTOR >

* CNP102	1-565-295-11	PLUG, CONNECTOR 4P

< SWITCH >

S101	1-554-303-21	SWITCH, TACTILE (POWER (ON/STANDBY))

****

*	A-4306-649-A	POWER SUPPLY BOARD, COMPLETE (US, Canadian)
*	A-4306-650-A	POWER SUPPLY BOARD, COMPLETE (AUS)

****

*	1-533-293-11	HOLDER, FUSE
*	4-942-204-01	PLATE, GROUND
	7-682-548-04	SCREW +BVTT 3X8 (S)

< BASE POST >

* BP903	1-535-139-00	BASE POST 19MM (10MM PITCH) 2P

< CAPACITOR >

⚠C901	1-161-744-00	CERAMIC	0.01uF		400V
C951	1-164-097-11	CERAMIC	0.022uF		50V
C952	1-164-097-11	CERAMIC	0.022uF		50V
C953	1-124-557-11	ELECT	1000uF	20%	25V
C954	1-162-282-31	CERAMIC	100PF	10%	50V
C955	1-124-477-11	ELECT	47uF	20%	25V
C956	1-124-477-11	ELECT	47uF	20%	25V
C957	1-124-903-11	ELECT	1uF	20%	50V
C958	1-164-097-11	CERAMIC	0.022uF		50V
C959	1-124-464-11	ELECT	0.22uF	20%	50V
C960	1-161-494-00	CERAMIC	0.022uF		25V

< JACK >

⚠CNJ901	1-540-060-11	OUTLET, AC (POLAR) (AC OUTLET) (US, Canadian)

The components identified by mark ⚠ or dotted line with mark. ⚠ are critical for safety. Replace only with part number specified.	Les composants identifiés par une marque ⚠ sont critiques pour la sécurité. Ne les remplacer que par une pièce portant le numéro spécifié.

POWER SUPPLY | SP-TM | SURROUND (D711)

Ref. No.	Part No.	Description			Remark
		< CONNECTOR >			
* CNP901	1-564-321-00	PIN, CONNECTOR 2P			
* CNP902	1-564-507-11	PLUG, CONNECTOR 4P			
* CNP912	1-564-321-00	PIN, CONNECTOR 2P (AUS)			
		< DIODE >			
D951	8-719-200-82	DIODE 11ES2			
D952	8-719-200-82	DIODE 11ES2			
D953	8-719-200-82	DIODE 11ES2			
D954	8-719-200-82	DIODE 11ES2			
D955	8-719-987-63	DIODE 1N4148M			
D956	8-719-987-63	DIODE 1N4148M			
D957	8-719-933-41	DIODE HZS6C3L			
D958	8-719-987-63	DIODE 1N4148M			
D959	8-719-933-41	DIODE HZS6C3L			
D960	8-719-985-53	DIODE HZS4ALL			
		< TRANSISTOR >			
Q951	8-729-209-15	TRANSISTOR 2SD2012			
Q952	8-729-119-79	TRANSISTOR 2SC2785-FEK			
Q953	8-729-119-79	TRANSISTOR 2SC2785-FEK			
Q954	8-729-119-76	TRANSISTOR 2SA1175-HFE			
Q955	8-729-119-76	TRANSISTOR 2SA1175-HFE			
Q956	8-729-119-79	TRANSISTOR 2SC2785-FEK			
		< RESISTOR >			
⚠R901	1-202-725-00	SOLID (US, Canadian)	3.3M	10%	1/2W
R951	1-249-396-11	CARBON	18	5%	1/6W
R952	1-249-417-11	CARBON	1K	5%	1/4W
R953	1-249-437-11	CARBON	47K	5%	1/4W
R954	1-249-425-11	CARBON	4.7K	5%	1/4W
R955	1-249-433-11	CARBON	22K	5%	1/4W
R956	1-249-429-11	CARBON	10K	5%	1/4W
R957	1-249-417-11	CARBON	1K	5%	1/4W
R958	1-249-429-11	CARBON	10K	5%	1/4W
R959	1-249-429-11	CARBON	10K	5%	1/4W
R960	1-249-426-11	CARBON	5.6K	5%	1/4W
R961	1-249-417-11	CARBON	1K	5%	1/4W
R962	1-249-426-11	CARBON	5.6K	5%	1/4W
		< RELAY >			
⚠RY901	1-515-701-11	RELAY (US, Canadian)			
⚠RY901	1-515-617-11	RELAY (AUS)			
		< TRANSFORMER >			
⚠T901	1-450-361-11	TRANSFORMER, POWER (US, Canadian)			
⚠T901	1-450-358-11	TRANSFORMER, POWER (AUS)			

Ref. No.	Part No.	Description			Remark
*	1-647-951-11	SP-TM BOARD			
		**********			
		< CONNECTOR >			
* CNP55	1-564-518-11	PLUG, CONNECTOR 3P			
		< DIODE >			
D645	8-719-987-63	DIODE 1N4148M			
		< TRANSISTOR >			
Q643	8-729-119-79	TRANSISTOR 2SC2785-FEK			
		< RESISTOR >			
R643	1-249-421-11	CARBON	2.2K	5%	1/4W
⚠R723	1-216-431-11	METAL OXIDE	560	5%	1W F
⚠R773	1-216-431-11	METAL OXIDE	560	5%	1W F
		< RELAY >			
RY643	1-515-765-11	RELAY			
		< SWITCH >			
S701	1-572-322-11	SWITCH, SLIDE (SPEAKERS)			
S710	1-692-196-11	SWITCH, SLIDE (IMPEDANCE) (D911)			
		< TERMINAL >			
TM701	1-537-376-11	TERMINAL BOARD (SP) (FRONT SPEAKERS)			
TM702	1-537-510-11	TERMINAL BOARD (SPEAKER) (6P) (SURROUND SPEAKERS)			
**********					
*	A-4360-670-A	SURROUND BOARD, COMPLETE (D711)			
		**********			
		< CAPACITOR >			
C301	1-124-907-11	ELECT	10uF	20%	50V
C302	1-162-215-31	CERAMIC	47PF	5%	50V
C303	1-124-907-11	ELECT	10uF	20%	50V
C304	1-124-907-11	ELECT	10uF	20%	50V
C305	1-137-399-11	FILM	0.1uF	5%	50V
C306	1-137-399-11	FILM	0.1uF	5%	50V
C307	1-124-252-00	ELECT	0.33uF	20%	50V
C308	1-162-292-31	CERAMIC	680PF	10%	50V
C309	1-124-927-11	ELECT	4.7uF	20%	100V
C310	1-124-927-11	ELECT	4.7uF	20%	100V
C311	1-124-250-00	ELECT	0.15uF	20%	50V
C312	1-123-382-00	ELECT	3.3uF	20%	100V
C313	1-136-173-00	FILM	0.47uF	5%	50V
C314	1-124-907-11	ELECT	10uF	20%	50V

The components identified by mark ⚠ or dotted line with mark ⚠ are critical for safety. Replace only with part number specified.	Les composants identifiés par une marque ⚠ sont critiques pour la sécurité. Ne les remplacer que par une pièce portant le numéro spécifié.

Ref. No.	Part No.	Description			Remark
C316-318					
	1-124-907-11	ELECT	10uF	20%	50V
C319	1-136-173-00	FILM	0.47uF	5%	50V
C320	1-124-907-11	ELECT	10uF	20%	50V
C321	1-124-907-11	ELECT	10uF	20%	50V
C322	1-137-371-11	FILM	0.015uF	5%	50V
C323	1-137-370-11	FILM	0.01uF	5%	50V
C324	1-162-292-31	CERAMIC	680PF	10%	50V
C325	1-137-399-11	FILM	0.1uF	5%	50V
C326	1-124-477-11	ELECT	47uF	20%	25V
C327	1-126-176-11	ELECT	220uF	20%	10V
C329	1-162-215-31	CERAMIC	47PF	5%	50V
C330	1-136-169-00	FILM	0.22uF	5%	50V
C331	1-124-907-11	ELECT	10uF	20%	50V
C332	1-124-472-11	ELECT	470uF	20%	10V
C333	1-124-927-11	ELECT	4.7uF	20%	100V
C334	1-162-294-31	CERAMIC	0.001uF	10%	50V
C335	1-137-372-11	FILM	0.022uF	5%	50V
C337	1-126-176-11	ELECT	220uF	20%	10V
C338	1-126-101-11	ELECT	100uF	20%	16V
C339	1-126-176-11	ELECT	220uF	20%	10V
C340	1-137-399-11	FILM	0.1uF	5%	50V
C341	1-124-477-11	ELECT	47uF	20%	25V
C342	1-162-209-31	CERAMIC	27PF	5%	50V
C343	1-162-209-31	CERAMIC	27PF	5%	50V
C344	1-136-169-00	FILM	0.22uF	5%	50V
C345	1-137-375-11	FILM	0.068uF	5%	50V
C346	1-130-478-00	MYLAR	0.0039uF	5%	50V
C347	1-161-377-00	CERAMIC	0.0047uF	30%	16V
C348	1-130-489-00	MYLAR	0.033uF	5%	50V
C349	1-124-768-11	ELECT	4.7uF	20%	50V
C350	1-126-101-11	ELECT	100uF	20%	16V
C351	1-124-907-11	ELECT	10uF	20%	50V
C352	1-162-215-31	CERAMIC	47PF	5%	50V
C353	1-124-907-11	ELECT	10uF	20%	50V
C354	1-124-907-11	ELECT	10uF	20%	50V
C355	1-137-399-11	FILM	0.1uF	5%	50V
C356	1-137-399-11	FILM	0.1uF	5%	50V
C357	1-124-252-00	ELECT	0.33uF	20%	50V
C358	1-162-292-31	CERAMIC	680PF	10%	50V
C359	1-124-927-11	ELECT	4.7uF	20%	100V
C360	1-124-927-11	ELECT	4.7uF	20%	100V
C361	1-124-250-00	ELECT	0.15uF	20%	50V
C362	1-123-382-00	ELECT	3.3uF	20%	100V
C363	1-136-173-00	FILM	0.47uF	5%	50V
C364	1-124-907-11	ELECT	10uF	20%	50V
C366	1-162-284-31	CERAMIC	150PF	10%	50V
C367	1-124-903-11	ELECT	1uF	20%	50V
C382	1-124-903-11	ELECT	1uF	20%	50V

Ref. No.	Part No.	Description			Remark
C383	1-124-927-11	ELECT	4.7uF	20%	100V
C384	1-130-489-00	MYLAR	0.033uF	5%	50V
C385	1-137-437-11	FILM	0.0056uF	5%	50V
C386	1-161-329-00	CERAMIC	0.0068uF	30%	16V
C387	1-136-169-00	FILM	0.22uF	5%	50V
C388	1-124-907-11	ELECT	10uF	20%	50V
C389	1-162-291-31	CERAMIC	560PF	10%	50V
C390-392					
	1-124-907-11	ELECT	10uF	20%	50V
C393	1-162-292-31	CERAMIC	680PF	10%	50V
C394	1-136-167-00	FILM	0.15uF	5%	50V
C395	1-162-284-31	CERAMIC	150PF	10%	50V
C396	1-137-372-11	FILM	0.022uF	5%	50V
C397	1-162-294-31	CERAMIC	0.001uF	10%	50V
C398	1-124-927-11	ELECT	4.7uF	20%	100V
C399	1-137-372-11	FILM	0.022uF	5%	50V
C401	1-124-927-11	ELECT	4.7uF	20%	100V
C402	1-162-215-31	CERAMIC	47PF	5%	50V
C403	1-124-925-11	ELECT	2.2uF	20%	100V
C404	1-136-171-00	FILM	0.33uF	5%	50V
C405	1-130-489-00	MYLAR	0.033uF	5%	50V
C406	1-124-927-11	ELECT	4.7uF	20%	100V
C407	1-162-209-31	CERAMIC	27PF	5%	50V
C408	1-124-477-11	ELECT	47uF	20%	25V
C409	1-164-159-11	CERAMIC	0.1uF		50V
C410	1-124-477-11	ELECT	47uF	20%	25V
C411	1-130-484-00	MYLAR	0.012uF	5%	50V
C412	1-137-375-11	FILM	0.068uF	5%	50V
C413	1-130-476-00	MYLAR	0.0027uF	5%	50V
C414	1-124-907-11	ELECT	10uF	20%	50V
C415	1-137-372-11	FILM	0.022uF	5%	50V
C416	1-124-927-11	ELECT	4.7uF	20%	100V
C417	1-124-907-11	ELECT	10uF	20%	50V
C418	1-162-282-31	CERAMIC	100PF	10%	50V
C419	1-124-907-11	ELECT	10uF	20%	50V
C420	1-124-925-11	ELECT	2.2uF	20%	100V
C430-433					
	1-124-927-11	ELECT	4.7uF	20%	100V
C451	1-124-927-11	ELECT	4.7uF	20%	100V
C452	1-162-215-31	CERAMIC	47PF	5%	50V
C453	1-124-925-11	ELECT	2.2uF	20%	100V
C454	1-136-171-00	FILM	0.33uF	5%	50V
C455	1-130-489-00	MYLAR	0.033uF	5%	50V
C456	1-124-927-11	ELECT	4.7uF	20%	100V
C457	1-162-209-31	CERAMIC	27PF	5%	50V
C458	1-124-477-11	ELECT	47uF	20%	25V
C459	1-164-159-11	CERAMIC	0.1uF		50V
C460	1-124-477-11	ELECT	47uF	20%	25V
C461	1-130-484-00	MYLAR	0.012uF	5%	50V

SURROUND (D711)

Ref. No.	Part No.	Description				Remark
C462	1-137-375-11	FILM	0.068uF	5%	50V	
C463	1-130-476-00	MYLAR	0.0027uF	5%	50V	
C464	1-124-907-11	ELECT	10uF	20%	50V	
C465	1-137-372-11	FILM	0.022uF	5%	50V	
C467	1-124-907-11	ELECT	10uF	20%	50V	
C468	1-162-282-31	CERAMIC	100PF	10%	50V	
C469	1-124-907-11	ELECT	10uF	20%	50V	
C470	1-124-925-11	ELECT	2.2uF	20%	100V	
C480-483						
	1-124-927-11	ELECT	4.7uF	20%	100V	
		< CONNECTOR >				
CNS303	1-691-181-11	CONNECTOR (BOARD TO BOARD) 11P				
CNS304	1-691-185-11	CONNECTOR (BOARD TO BOARD) 15P				
		< DIODE >				
D401	8-719-987-63	DIODE	1N4148M			
D402	8-719-987-63	DIODE	1N4148M			
D403	8-719-987-63	DIODE	1N4148M			
D404	8-719-010-31	DIODE	UZ-4.7BS			
D451	8-719-987-63	DIODE	1N4148M			
D452	8-719-987-63	DIODE	1N4148M			
D453	8-719-987-63	DIODE	1N4148M			
D454	8-719-010-31	DIODE	UZ-4.7BS			
		< IC >				
IC301	8-759-821-13	IC	LM3364K-15			
IC303	8-759-051-63	IC	TC9215P			
IC304	8-759-051-65	IC	TC9214P			
IC305	8-759-177-82	IC	LV1000N-A			
IC306	8-759-098-54	IC	LA2780N			
IC307	8-759-634-51	IC	M5218AP			
IC311	8-759-634-51	IC	M5218AP			
IC401	8-759-072-32	IC	TC9184P			
IC403	8-759-820-11	IC	LC7535			
IC410	8-759-634-51	IC	M5218AP			
IC412-414						
	8-759-634-51	IC	M5218AP			
		< COIL >				
L301	1-410-521-11	INDUCTOR	100uH			
		< TRANSISTOR >				
Q301	8-729-900-36	TRANSISTOR	DTC124ES			
Q311	8-729-900-36	TRANSISTOR	DTC124ES			
Q312	8-729-209-15	TRANSISTOR	2SD2012			
Q401	8-729-202-67	TRANSISTOR	2SK246-GR3			
Q402-404						
	8-729-141-30	TRANSISTOR	2SC3623A-LK			

Ref. No.	Part No.	Description				Remark
Q451	8-729-202-67	TRANSISTOR	2SK246-GR3			
Q452-454						
	8-729-141-30	TRANSISTOR	2SC3623A-LK			
		< RESISTOR >				
R301-303						
	1-247-887-00	CARBON	220K	5%	1/4W	
R304	1-249-405-11	CARBON	100	5%	1/4W	
R305	1-247-887-00	CARBON	220K	5%	1/4W	
R306	1-249-437-11	CARBON	47K	5%	1/4W	
R307	1-249-437-11	CARBON	47K	5%	1/4W	
R310-312						
	1-249-427-11	CARBON	6.8K	5%	1/4W	
R315	1-247-903-00	CARBON	1M	5%	1/4W	
R316	1-249-437-11	CARBON	47K	5%	1/4W	
R317	1-249-423-11	CARBON	3.3K	5%	1/4W	
R318	1-249-441-11	CARBON	100K	5%	1/4W	
R319	1-249-413-11	CARBON	470	5%	1/4W	
R320	1-249-428-11	CARBON	8.2K	5%	1/4W	
R321	1-249-428-11	CARBON	8.2K	5%	1/4W	
R322	1-249-429-11	CARBON	10K	5%	1/4W	
R323	1-249-431-11	CARBON	15K	5%	1/4W	
R324	1-249-428-11	CARBON	8.2K	5%	1/4W	
R325	1-249-436-11	CARBON	39K	5%	1/4W	
R326	1-247-887-00	CARBON	220K	5%	1/4W	
R327	1-247-887-00	CARBON	220K	5%	1/4W	
R328	1-249-431-11	CARBON	15K	5%	1/4W	
R329	1-247-838-00	CARBON	2K	5%	1/4W	
R330	1-249-437-11	CARBON	47K	5%	1/4W	
R331	1-247-852-11	CARBON	7.5K	5%	1/4W	
R332	1-249-433-11	CARBON	22K	5%	1/4W	
R333	1-249-433-11	CARBON	22K	5%	1/4W	
R334	1-247-887-00	CARBON	220K	5%	1/4W	
R335	1-249-429-11	CARBON	10K	5%	1/4W	
R336	1-249-441-11	CARBON	100K	5%	1/4W	
R337	1-249-441-11	CARBON	100K	5%	1/4W	
R338	1-247-887-00	CARBON	220K	5%	1/4W	
R339-341						
	1-249-429-11	CARBON	10K	5%	1/4W	
R342	1-247-895-00	CARBON	470K	5%	1/4W	
R348	1-249-417-11	CARBON	1K	5%	1/4W	
R349	1-249-429-11	CARBON	10K	5%	1/4W	
R351-353						
	1-247-887-00	CARBON	220K	5%	1/4W	
R354	1-249-405-11	CARBON	100	5%	1/4W	
R355	1-247-887-00	CARBON	220K	5%	1/4W	
R378	1-249-431-11	CARBON	15K	5%	1/4W	
R379	1-247-838-00	CARBON	2K	5%	1/4W	
R380	1-249-437-11	CARBON	47K	5%	1/4W	

Ref. No.	Part No.	Description			Remark
R381	1-247-852-11	CARBON	7.5K	5%	1/4W
R385	1-249-429-11	CARBON	10K	5%	1/4W
R391	1-249-429-11	CARBON	10K	5%	1/4W
R392	1-247-895-00	CARBON	470K	5%	1/4W
R396-398					
	1-249-419-11	CARBON	1.5K	5%	1/4W
R399	1-249-429-11	CARBON	10K	5%	1/4W
R402	1-249-429-11	CARBON	10K	5%	1/4W
R403	1-247-895-00	CARBON	470K	5%	1/4W
R404	1-249-441-11	CARBON	100K	5%	1/4W
R405	1-249-423-11	CARBON	3.3K	5%	1/4W
R406	1-247-883-00	CARBON	150K	5%	1/4W
R407	1-249-412-11	CARBON	390	5%	1/4W
R408	1-249-427-11	CARBON	6.8K	5%	1/4W
R409	1-249-427-11	CARBON	6.8K	5%	1/4W
R410	1-249-440-11	CARBON	82K	5%	1/4W
R411	1-247-895-00	CARBON	470K	5%	1/4W
R412	1-249-419-11	CARBON	1.5K	5%	1/4W
R413	1-249-425-11	CARBON	4.7K	5%	1/4W
R414	1-247-897-11	CARBON	560K	5%	1/4W
R415	1-249-436-11	CARBON	39K	5%	1/4W
R416	1-249-434-11	CARBON	27K	5%	1/4W
R417	1-249-426-11	CARBON	5.6K	5%	1/4W
R418	1-249-418-11	CARBON	1.2K	5%	1/4W
R419	1-249-417-11	CARBON	1K	5%	1/4W
R420	1-249-405-11	CARBON	100	5%	1/4W
R421	1-249-417-11	CARBON	1K	5%	1/4W
R422	1-249-417-11	CARBON	1K	5%	1/4W
R423	1-249-441-11	CARBON	100K	5%	1/4W
R424	1-249-430-11	CARBON	12K	5%	1/4W
R426	1-249-425-11	CARBON	4.7K	5%	1/4W
R427	1-249-441-11	CARBON	100K	5%	1/4W
R428	1-249-431-11	CARBON	15K	5%	1/4W
R429	1-249-441-11	CARBON	100K	5%	1/4W
R430	1-249-408-11	CARBON	180	5%	1/4W
R431	1-247-897-11	CARBON	560K	5%	1/4W
R432	1-249-424-11	CARBON	3.9K	5%	1/4W
R433-435					
	1-249-441-11	CARBON	100K	5%	1/4W
R440	1-247-887-00	CARBON	220K	5%	1/4W
R441	1-249-429-11	CARBON	10K	5%	1/4W
R442	1-247-887-00	CARBON	220K	5%	1/4W
R443	1-249-435-11	CARBON	33K	5%	1/4W
R452	1-249-429-11	CARBON	10K	5%	1/4W
R453	1-247-895-00	CARBON	470K	5%	1/4W
R454	1-249-441-11	CARBON	100K	5%	1/4W
R455	1-249-423-11	CARBON	3.3K	5%	1/4W
R456	1-247-883-00	CARBON	150K	5%	1/4W
R457	1-249-412-11	CARBON	390	5%	1/4W
R458	1-249-427-11	CARBON	6.8K	5%	1/4W
R459	1-249-427-11	CARBON	6.8K	5%	1/4W
R460	1-249-440-11	CARBON	82K	5%	1/4W
R461	1-247-895-00	CARBON	470K	5%	1/4W
R462	1-249-419-11	CARBON	1.5K	5%	1/4W
R463	1-249-425-11	CARBON	4.7K	5%	1/4W
R464	1-247-897-11	CARBON	560K	5%	1/4W
R465	1-249-436-11	CARBON	39K	5%	1/4W
R466	1-249-434-11	CARBON	27K	5%	1/4W
R467	1-249-426-11	CARBON	5.6K	5%	1/4W
R468	1-249-418-11	CARBON	1.2K	5%	1/4W
R469	1-249-417-11	CARBON	1K	5%	1/4W
R470	1-249-405-11	CARBON	100	5%	1/4W
R473	1-249-441-11	CARBON	100K	5%	1/4W
R474	1-249-430-11	CARBON	12K	5%	1/4W
R476	1-249-425-11	CARBON	4.7K	5%	1/4W
R477	1-249-441-11	CARBON	100K	5%	1/4W
R478	1-249-431-11	CARBON	15K	5%	1/4W
R479	1-249-441-11	CARBON	100K	5%	1/4W
R480	1-249-408-11	CARBON	180	5%	1/4W
R481	1-247-897-11	CARBON	560K	5%	1/4W
R482	1-249-424-11	CARBON	3.9K	5%	1/4W
R483	1-249-441-11	CARBON	100K	5%	1/4W
R490	1-247-887-00	CARBON	220K	5%	1/4W
R491	1-249-429-11	CARBON	10K	5%	1/4W
R492	1-247-887-00	CARBON	220K	5%	1/4W
R493	1-249-431-11	CARBON	15K	5%	1/4W

< VIBRATOR >

X301	1-567-132-00	VIBRATOR, CERAMIC (8MHz)			

****

*	A-4360-639-A	SURROUND BOARD, COMPLETE (D911)			

****

< CAPACITOR >

C301	1-124-927-11	ELECT	4.7uF	20%	100V
C302	1-136-169-00	FILM	0.22uF	5%	50V
C303	1-164-159-11	CERAMIC	0.1uF		50V
C304	1-136-169-00	FILM	0.22uF	5%	50V
C305	1-124-907-11	ELECT	10uF	20%	50V
C306	1-136-165-00	FILM	0.1uF	5%	50V
C307	1-136-165-00	FILM	0.1uF	5%	50V
C308	1-136-153-00	FILM	0.01uF	5%	50V
C309	1-136-177-00	FILM	1uF	5%	50V
C310	1-136-153-00	FILM	0.01uF	5%	50V
C311	1-137-366-11	FILM	0.0022uF	5%	50V
C312	1-164-159-11	CERAMIC	0.1uF		50V
C313	1-136-153-00	FILM	0.01uF	5%	50V

SURROUND (D911)

Ref. No.	Part No.	Description			Remark
C314	1-136-165-00	FILM	0.1uF	5%	50V
C315	1-124-122-11	ELECT	100uF	20%	50V
C316	1-136-165-00	FILM	0.1uF	5%	50V
C317-319					
	1-136-157-00	FILM	0.022uF	5%	50V
C320	1-136-165-00	FILM	0.1uF	5%	50V
C321	1-137-363-91	FILM	680PF	5%	50V
C322	1-136-157-00	FILM	0.022uF	5%	50V
C323	1-136-165-00	FILM	0.1uF	5%	50V
C324	1-137-363-91	FILM	680PF	5%	50V
C325-328					
	1-136-171-00	FILM	0.33uF	5%	50V
C329	1-136-169-00	FILM	0.22uF	5%	50V
C330	1-136-169-00	FILM	0.22uF	5%	50V
C331	1-124-927-11	ELECT	4.7uF	20%	100V
C332-336					
	1-124-907-11	ELECT	10uF	20%	50V
C340-342					
	1-124-927-11	ELECT	4.7uF	20%	100V
C343	1-124-907-11	ELECT	10uF	20%	50V
C345	1-137-435-91	FILM	0.0027uF	5%	50V
C346	1-130-481-00	MYLAR	0.0068uF	5%	50V
C347	1-162-289-31	CERAMIC	390PF	10%	50V
C348	1-124-903-11	ELECT	1uF	20%	50V
C349	1-124-925-11	ELECT	2.2uF	20%	100V
C350	1-124-903-11	ELECT	1uF	20%	50V
C351	1-124-903-11	ELECT	1uF	20%	50V
C352	1-162-282-31	CERAMIC	100PF	10%	50V
C353	1-137-435-91	FILM	0.0027uF	5%	50V
C354	1-130-481-00	MYLAR	0.0068uF	5%	50V
C355	1-124-927-11	ELECT	4.7uF	20%	100V
C356	1-124-477-11	ELECT	47uF	20%	25V
C357	1-164-159-11	CERAMIC	0.1uF		50V
C358	1-164-159-11	CERAMIC	0.1uF		50V
C359	1-137-436-11	FILM	0.0039uF	5%	50V
C360	1-124-907-11	ELECT	10uF	20%	50V
C361	1-124-927-11	ELECT	4.7uF	20%	100V
C362	1-162-211-31	CERAMIC	33PF	5%	50V
C363	1-162-211-31	CERAMIC	33PF	5%	50V
C364	1-124-907-11	ELECT	10uF	20%	50V
C365	1-124-907-11	ELECT	10uF	20%	50V
C366	1-124-903-11	ELECT	1uF	20%	50V
C367	1-124-925-11	ELECT	2.2uF	20%	100V
C368	1-124-903-11	ELECT	1uF	20%	50V
C369	1-162-282-31	CERAMIC	100PF	10%	50V
C370	1-124-903-11	ELECT	1uF	20%	50V
C371	1-124-925-11	ELECT	2.2uF	20%	100V
C372	1-124-903-11	ELECT	1uF	20%	50V
C373	1-162-282-31	CERAMIC	100PF	10%	50V
C374	1-136-153-00	FILM	0.01uF	5%	50V
C375	1-137-438-11	FILM	0.0082uF	5%	50V
C376	1-162-288-31	CERAMIC	330PF	10%	50V
C377	1-136-153-00	FILM	0.01uF	5%	50V
C378	1-137-438-11	FILM	0.0082uF	5%	50V
C379	1-162-288-31	CERAMIC	330PF	10%	50V
C380	1-124-478-11	ELECT	100uF	20%	25V
C381	1-136-171-00	FILM	0.33uF	5%	50V
C382	1-136-165-00	FILM	0.1uF	5%	50V
C383	1-124-903-11	ELECT	1uF	20%	50V
C384	1-136-159-00	FILM	0.033uF	5%	50V
C385	1-137-368-11	FILM	0.0047uF	5%	50V
C386	1-136-158-00	FILM	0.027uF	5%	50V
C387	1-124-916-11	ELECT	22uF	20%	63V
C388	1-124-478-11	ELECT	100uF	20%	25V
C389	1-137-438-11	FILM	0.0082uF	5%	50V
C390-392					
	1-124-903-11	ELECT	1uF	20%	50V
C393	1-162-289-31	CERAMIC	390PF	10%	50V
C394	1-136-169-00	FILM	0.22uF	5%	50V
C395	1-136-169-00	FILM	0.22uF	5%	50V
C396	1-124-907-11	ELECT	10uF	20%	50V
C401	1-124-927-11	ELECT	4.7uF	20%	100V
C402	1-162-215-31	CERAMIC	47PF	5%	50V
C403	1-124-925-11	ELECT	2.2uF	20%	100V
C404	1-136-171-00	FILM	0.33uF	5%	50V
C405	1-136-159-00	FILM	0.033uF	5%	50V
C406	1-124-927-11	ELECT	4.7uF	20%	100V
C407	1-162-209-31	CERAMIC	27PF	5%	50V
C408	1-124-477-11	ELECT	47uF	20%	25V
C409	1-164-159-11	CERAMIC	0.1uF		50V
C410	1-124-477-11	ELECT	47uF	20%	25V
C411	1-136-154-00	FILM	0.012uF	5%	50V
C412	1-136-163-00	FILM	0.068uF	5%	50V
C413	1-137-435-91	FILM	0.0027uF	5%	50V
C414	1-124-907-11	ELECT	10uF	20%	50V
C415	1-136-157-00	FILM	0.022uF	5%	50V
C417	1-124-907-11	ELECT	10uF	20%	50V
C418	1-162-282-31	CERAMIC	100PF	10%	50V
C419	1-124-907-11	ELECT	10uF	20%	50V
C420	1-124-925-11	ELECT	2.2uF	20%	100V
C430-433					
	1-124-927-11	ELECT	4.7uF	20%	100V
C451	1-124-927-11	ELECT	4.7uF	20%	100V
C452	1-162-215-31	CERAMIC	47PF	5%	50V
C453	1-124-925-11	ELECT	2.2uF	20%	100V
C454	1-136-171-00	FILM	0.33uF	5%	50V
C455	1-136-159-00	FILM	0.033uF	5%	50V
C456	1-124-927-11	ELECT	4.7uF	20%	100V

Ref. No.	Part No.	Description			Remark
C457	1-162-209-31	CERAMIC	27PF	5%	50V
C458	1-124-477-11	ELECT	47uF	20%	25V
C459	1-164-159-11	CERAMIC	0.1uF		50V
C460	1-124-477-11	ELECT	47uF	20%	25V
C461	1-136-154-00	FILM	0.012uF	5%	50V
C462	1-136-163-00	FILM	0.068uF	5%	50V
C463	1-137-435-91	FILM	0.0027uF	5%	50V
C464	1-124-907-11	ELECT	10uF	20%	50V
C465	1-136-157-00	FILM	0.022uF	5%	50V
C466	1-124-927-11	ELECT	4.7uF	20%	100V
C467	1-124-907-11	ELECT	10uF	20%	50V
C468	1-162-282-31	CERAMIC	100PF	10%	50V
C469	1-124-907-11	ELECT	10uF	20%	50V
C470	1-124-925-11	ELECT	2.2uF	20%	100V
C480-483					
	1-124-927-11	ELECT	4.7uF	20%	100V
		< CONNECTOR >			
CNS303	1-691-181-11	CONNECTOR (BOARD TO BOARD) 11P			
CNS304	1-691-185-11	CONNECTOR (BOARD TO BOARD) 15P			
		< DIODE >			
D301	8-719-987-63	DIODE	1N4148M		
D401	8-719-987-63	DIODE	1N4148M		
D402	8-719-987-63	DIODE	1N4148M		
D403	8-719-987-63	DIODE	1N4148M		
D404	8-719-010-31	DIODE	UZ-4.7BS		
D451	8-719-987-63	DIODE	1N4148M		
D452	8-719-987-63	DIODE	1N4148M		
D453	8-719-987-63	DIODE	1N4148M		
D454	8-719-010-31	DIODE	UZ-4.7BS		
		< IC >			
IC301	8-759-503-59	IC	YM7128		
IC302	8-759-051-63	IC	TC9215P		
IC303	8-759-708-06	IC	NJM78L06A		
IC304	8-759-700-69	IC	NJM79L06A		
IC305	8-759-170-77	IC	SSM-2126A		
IC306	8-759-823-24	IC	LA2730		
IC307	8-759-514-77	IC	NE571N-A		
IC308	8-759-514-77	IC	NE571N-A		
IC309	8-759-051-63	IC	TC9215P		
IC314-319					
	8-759-634-51	IC	M5218AP		
IC401	8-759-072-32	IC	TC9184P		
IC403	8-759-820-11	IC	LC7535		
IC410	8-759-634-51	IC	M5218AP		
IC412-414					
	8-759-634-51	IC	M5218AP		

Ref. No.	Part No.	Description			Remark
		< COIL >			
L301	1-410-971-11	INDUCTOR	10uH		
		< TRANSISTOR >			
Q401	8-729-202-67	TRANSISTOR	2SK246-GR3		
Q402-404					
	8-729-141-30	TRANSISTOR	2SC3623A-LK		
Q451	8-729-202-67	TRANSISTOR	2SK246-GR3		
Q452-454					
	8-729-141-30	TRANSISTOR	2SC3623A-LK		
		< RESISTOR >			
R301	1-259-884-11	CARBON	4.7M	5%	1/4W
R302	1-259-884-11	CARBON	4.7M	5%	1/4W
R303-305					
	1-249-433-11	CARBON	22K	5%	1/4W
R306-311					
	1-249-417-11	CARBON	1K	5%	1/4W
R312	1-247-852-11	CARBON	7.5K	5%	1/4W
R313	1-249-431-11	CARBON	15K	5%	1/4W
R314	1-249-437-11	CARBON	47K	5%	1/4W
R315	1-247-852-11	CARBON	7.5K	5%	1/4W
R316	1-249-437-11	CARBON	47K	5%	1/4W
R317	1-249-431-11	CARBON	15K	5%	1/4W
R320-326					
	1-249-429-11	CARBON	10K	5%	1/4W
R327	1-249-433-11	CARBON	22K	5%	1/4W
R328	1-249-429-11	CARBON	10K	5%	1/4W
R329-331					
	1-249-441-11	CARBON	100K	5%	1/4W
R332	1-249-431-11	CARBON	15K	5%	1/4W
R333	1-249-434-11	CARBON	27K	5%	1/4W
R334	1-249-429-11	CARBON	10K	5%	1/4W
R335	1-249-429-11	CARBON	10K	5%	1/4W
R336	1-247-887-00	CARBON	220K	5%	1/4W
R337	1-249-417-11	CARBON	1K	5%	1/4W
R338	1-249-435-11	CARBON	33K	5%	1/4W
R339	1-249-435-11	CARBON	33K	5%	1/4W
R340-342					
	1-249-429-11	CARBON	10K	5%	1/4W
R343	1-249-437-11	CARBON	47K	5%	1/4W
R344	1-247-903-00	CARBON	1M	5%	1/4W
R345	1-249-426-11	CARBON	5.6K	5%	1/4W
R346	1-247-887-00	CARBON	220K	5%	1/4W
R347	1-249-417-11	CARBON	1K	5%	1/4W
R348	1-249-429-11	CARBON	10K	5%	1/4W
R349	1-249-429-11	CARBON	10K	5%	1/4W
R350	1-249-417-11	CARBON	1K	5%	1/4W
R351	1-247-887-00	CARBON	220K	5%	1/4W

SURROUND (D911)

Ref. No.	Part No.	Description				Remark
R352	1-249-417-11	CARBON	1K	5%	1/4W	
R353	1-249-428-11	CARBON	8.2K	5%	1/4W	
R354	1-249-426-11	CARBON	5.6K	5%	1/4W	
R355	1-249-435-11	CARBON	33K	5%	1/4W	
R356	1-249-417-11	CARBON	1K	5%	1/4W	
R357	1-249-428-11	CARBON	8.2K	5%	1/4W	
R358	1-249-426-11	CARBON	5.6K	5%	1/4W	
R359	1-249-435-11	CARBON	33K	5%	1/4W	
R360	1-249-421-11	CARBON	2.2K	5%	1/4W	
R361	1-249-433-11	CARBON	22K	5%	1/4W	
R362	1-247-889-00	CARBON	270K	5%	1/4W	
R363	1-247-850-11	CARBON	6.2K	5%	1/4W	
R364	1-249-437-11	CARBON	47K	5%	1/4W	
R365	1-249-423-11	CARBON	3.3K	5%	1/4W	
R366	1-249-408-11	CARBON	180	5%	1/4W	
R367	1-249-430-11	CARBON	12K	5%	1/4W	
R368	1-249-429-11	CARBON	10K	5%	1/4W	
R369	1-249-431-11	CARBON	15K	5%	1/4W	
R370	1-249-434-11	CARBON	27K	5%	1/4W	
R371	1-249-433-11	CARBON	22K	5%	1/4W	
R372	1-249-435-11	CARBON	33K	5%	1/4W	
R373	1-249-428-11	CARBON	8.2K	5%	1/4W	
R374	1-249-409-11	CARBON	220	5%	1/4W	
R375	1-247-889-00	CARBON	270K	5%	1/4W	
R376	1-249-433-11	CARBON	22K	5%	1/4W	
R377	1-249-433-11	CARBON	22K	5%	1/4W	
R378	1-249-421-11	CARBON	2.2K	5%	1/4W	
R379	1-249-421-11	CARBON	2.2K	5%	1/4W	
R380	1-249-423-11	CARBON	3.3K	5%	1/4W	
R381	1-249-423-11	CARBON	3.3K	5%	1/4W	
R382	1-249-421-11	CARBON	2.2K	5%	1/4W	
R383	1-249-421-11	CARBON	2.2K	5%	1/4W	
R384	1-249-429-11	CARBON	10K	5%	1/4W	
R385	1-249-435-11	CARBON	33K	5%	1/4W	
R386	1-249-421-11	CARBON	2.2K	5%	1/4W	
R387	1-249-421-11	CARBON	2.2K	5%	1/4W	
R402	1-249-429-11	CARBON	10K	5%	1/4W	
R403	1-247-895-00	CARBON	470K	5%	1/4W	
R404	1-249-441-11	CARBON	100K	5%	1/4W	
R405	1-249-423-11	CARBON	3.3K	5%	1/4W	
R406	1-247-883-00	CARBON	150K	5%	1/4W	
R407	1-249-412-11	CARBON	390	5%	1/4W	
R408	1-249-427-11	CARBON	6.8K	5%	1/4W	
R409	1-247-852-11	CARBON	7.5K	5%	1/4W	
R410	1-249-440-11	CARBON	82K	5%	1/4W	
R411	1-247-895-00	CARBON	470K	5%	1/4W	
R412	1-249-419-11	CARBON	1.5K	5%	1/4W	
R413	1-249-425-11	CARBON	4.7K	5%	1/4W	
R414	1-247-897-11	CARBON	560K	5%	1/4W	
R415	1-249-436-11	CARBON	39K	5%	1/4W	
R416	1-249-434-11	CARBON	27K	5%	1/4W	
R417	1-249-426-11	CARBON	5.6K	5%	1/4W	
R418	1-249-418-11	CARBON	1.2K	5%	1/4W	
R419	1-249-417-11	CARBON	1K	5%	1/4W	
R420	1-249-405-11	CARBON	100	5%	1/4W	
R421	1-249-417-11	CARBON	1K	5%	1/4W	
R422	1-249-417-11	CARBON	1K	5%	1/4W	
R423	1-249-441-11	CARBON	100K	5%	1/4W	
R424	1-249-430-11	CARBON	12K	5%	1/4W	
R426	1-249-425-11	CARBON	4.7K	5%	1/4W	
R427	1-249-441-11	CARBON	100K	5%	1/4W	
R428	1-249-436-11	CARBON	39K	5%	1/4W	
R429	1-249-441-11	CARBON	100K	5%	1/4W	
R430	1-249-408-11	CARBON	180	5%	1/4W	
R431	1-247-897-11	CARBON	560K	5%	1/4W	
R432	1-249-424-11	CARBON	3.9K	5%	1/4W	
R433-435						
	1-249-441-11	CARBON	100K	5%	1/4W	
R440	1-247-887-00	CARBON	220K	5%	1/4W	
R441	1-249-429-11	CARBON	10K	5%	1/4W	
R442	1-247-887-00	CARBON	220K	5%	1/4W	
R443	1-249-433-11	CARBON	22K	5%	1/4W	
R452	1-249-429-11	CARBON	10K	5%	1/4W	
R453	1-247-895-00	CARBON	470K	5%	1/4W	
R454	1-249-441-11	CARBON	100K	5%	1/4W	
R455	1-249-423-11	CARBON	3.3K	5%	1/4W	
R456	1-247-883-00	CARBON	150K	5%	1/4W	
R457	1-249-412-11	CARBON	390	5%	1/4W	
R458	1-249-427-11	CARBON	6.8K	5%	1/4W	
R459	1-247-852-11	CARBON	7.5K	5%	1/4W	
R460	1-249-440-11	CARBON	82K	5%	1/4W	
R461	1-247-895-00	CARBON	470K	5%	1/4W	
R462	1-249-419-11	CARBON	1.5K	5%	1/4W	
R463	1-249-425-11	CARBON	4.7K	5%	1/4W	
R464	1-247-897-11	CARBON	560K	5%	1/4W	
R465	1-249-436-11	CARBON	39K	5%	1/4W	
R466	1-249-434-11	CARBON	27K	5%	1/4W	
R467	1-249-426-11	CARBON	5.6K	5%	1/4W	
R468	1-249-418-11	CARBON	1.2K	5%	1/4W	
R469	1-249-417-11	CARBON	1K	5%	1/4W	
R470	1-249-405-11	CARBON	100	5%	1/4W	
R473	1-249-441-11	CARBON	100K	5%	1/4W	
R474	1-249-430-11	CARBON	12K	5%	1/4W	
R476	1-249-425-11	CARBON	4.7K	5%	1/4W	
R477	1-249-441-11	CARBON	100K	5%	1/4W	
R478	1-249-436-11	CARBON	39K	5%	1/4W	
R479	1-249-441-11	CARBON	100K	5%	1/4W	
R480	1-249-408-11	CARBON	180	5%	1/4W	

Ref. No.	Part No.	Description				Remark
R481	1-247-897-11	CARBON	560K	5%	1/4W	
R482	1-249-424-11	CARBON	3.9K	5%	1/4W	
R483	1-249-441-11	CARBON	100K	5%	1/4W	
R490	1-247-887-00	CARBON	220K	5%	1/4W	
R491	1-249-429-11	CARBON	10K	5%	1/4W	
R492	1-247-887-00	CARBON	220K	5%	1/4W	
R493	1-247-858-11	CARBON	13K	5%	1/4W	
		< VIBRATOR >				
X301	1-579-124-11	VIBRATOR, CERAMIC (7.7MHz)				
**********						
*	A-4360-652-A	SURROUND AMPLIFIER BOARD, COMPLETE (US, AUS)				
*	A-4360-653-A	SURROUND AMPLIFIER BOARD, COMPLETE (Canadian)				
		**********				
*	4-924-988-21	PLATE (ST), GROUND				
		< CAPACITOR >				
C621	1-124-927-11	ELECT	4.7uF	20%	100V	
C622	1-162-282-31	CERAMIC	100PF	10%	50V	
C623	1-162-282-31	CERAMIC	100PF	10%	50V	
C625	1-124-925-11	ELECT	2.2uF	20%	100V	
C626	1-162-284-31	CERAMIC	150PF	10%	50V	
C627	1-130-487-00	MYLAR	0.022uF	5%	50V	
C629	1-124-927-11	ELECT	4.7uF	20%	100V	
C977	1-124-618-11	ELECT	2200uF	20%	35V	
C978	1-124-618-11	ELECT	2200uF	20%	35V	
C988	1-102-394-11	CERAMIC	0.01uF		250V	
C989	1-102-394-11	CERAMIC	0.01uF		250V	
		< CONNECTOR >				
CNJ802	1-564-523-11	PLUG, CONNECTOR 8P				
* CNJ803	1-568-850-11	SOCKET, CONNECTOR 7P				
* CNP601	1-564-521-11	PLUG, CONNECTOR 6P				
		< DIODE >				
D621	8-719-987-63	DIODE 1N4148M				
D641	8-719-987-63	DIODE 1N4148M				
D971	8-719-302-38	DIODE RBV-602-01				
D973	8-719-312-09	DIODE RBA-402				
D975	8-719-987-63	DIODE 1N4148M				
		< IC >				
IC621	8-759-502-33	IC SI-18752				

Ref. No.	Part No.	Description				Remark
		< COIL >				
L621	1-420-872-00	COIL, AIR CORE				
		< TRANSISTOR >				
Q614	8-729-119-79	TRANSISTOR 2SC2785-FEK				
Q621	8-729-140-82	TRANSISTOR 2SA988-PAFAEA				
Q972	8-729-119-79	TRANSISTOR 2SC2785-FEK				
		< RESISTOR >				
R621	1-249-417-11	CARBON	1K	5%	1/4W	
R622	1-249-439-11	CARBON	68K	5%	1/4W	
R623	1-247-830-11	CARBON	910	5%	1/4W	
R624	1-249-439-11	CARBON	68K	5%	1/4W	
R625	1-249-423-11	CARBON	3.3K	5%	1/4W	
R626	1-249-431-11	CARBON	15K	5%	1/4W	
⚠R627	1-217-151-00	METAL PLATE	0.22		2W	F
R628	1-249-389-11	CARBON	4.7	5%	1/4W	
⚠R629	1-249-393-11	CARBON	10	5%	1/4W	F
R630	1-249-431-11	CARBON	15K	5%	1/4W	
R641	1-249-421-11	CARBON	2.2K	5%	1/4W	
R977	1-249-421-11	CARBON	2.2K	5%	1/4W	
		< RELAY >				
RY641	1-515-533-11	RELAY				
RY641	1-515-920-11	RELAY (24V)				
RY902	1-515-894-11	RELAY (US, AUS)				
**********						
*	1-647-940-11	T.T (P) BOARD				
		**********				
		< CONNECTOR >				
* CNJ101	1-564-518-11	PLUG, CONNECTOR 3P				
**********						
*	1-647-932-11	T.T (S) BOARD (US, Canadian)				
*	1-647-933-11	T.T (S) BOARD (AUS)				
		**********				
*	1-533-293-11	HOLDER, FUSE				
		< CONNECTOR >				
* CNS806	1-564-512-11	PLUG, CONNECTOR 9P				
**********						

The components identified by mark ⚠ or dotted line with mark. ⚠ are critical for safety. Replace only with part number specified.	Les composants identifiés par une marque ⚠ sont critiques pour la sécurité. Ne les remplacer que par une pièce portant le numéro spécifié.

TUNER/VIDEO | VIDEO (3)

Ref. No.	Part No.	Description			Remark
*	1-647-936-11	TUNER/VIDEO BOARD			
		**********			
		< CAPACITOR >			
C251	1-124-927-11	ELECT	4.7uF	20%	100V
C252	1-124-927-11	ELECT	4.7uF	20%	100V
C253	1-124-472-11	ELECT	470uF	20%	10V
C254	1-124-472-11	ELECT	470uF	20%	10V
C256	1-124-477-11	ELECT	47uF	20%	25V
C257	1-124-927-11	ELECT	4.7uF	20%	100V
		< CONNECTOR >			
* CNJ201	1-568-832-11	SOCKET, CONNECTOR 13P			
		< JACK >			
* CNJ508	1-695-317-21	JACK, PIN 2P (VIDEO 1/MONITOR)			
CNJ509	1-695-317-21	JACK, PIN 2P (VIDEO 1/VIDEO 2/LD)			
		< ENCAPSULATED COMPONENT >			
FE1	1-239-727-11	ENCAPSULATED COMPONENT (FCC) (US, Canadian)			
FE1	1-239-611-11	ENCAPSULATED COMPONENT (AUS)			
		< IC >			
IC251	8-759-061-95	IC SN761200N			
		< COIL >			
L251	1-410-509-11	INDUCTOR	10uH		
		< TRANSISTOR >			
Q251	8-729-119-76	TRANSISTOR	2SA1175-HFE		
Q252	8-729-119-76	TRANSISTOR	2SA1175-HFE		
		< RESISTOR >			
R251	1-247-804-11	CARBON	75	5%	1/4W
R252	1-247-804-11	CARBON	75	5%	1/4W
R253	1-249-403-11	CARBON	68	5%	1/4W
R254	1-249-429-11	CARBON	10K	5%	1/4W
R255	1-249-403-11	CARBON	68	5%	1/4W
R256	1-249-429-11	CARBON	10K	5%	1/4W
R259-262	1-249-405-11	CARBON	100	5%	1/4W
		< TERMINAL >			
TM1	1-537-238-21	TERMINAL BOARD (ANTENNA)			

****

Ref. No.	Part No.	Description			Remark
*	1-647-929-11	VIDEO (3) BOARD (D911)			
		**********			
		< JACK >			
CNJ501	1-580-174-31	JACK, PIN (3P FRONT) (VIDEO 3 INPUT)			
		< RESISTOR >			
R265	1-247-804-11	CARBON	75	5%	1/4W
R535	1-249-417-11	CARBON	1K	5%	1/4W
R536	1-249-437-11	CARBON	47K	5%	1/4W
R585	1-249-417-11	CARBON	1K	5%	1/4W
R586	1-249-437-11	CARBON	47K	5%	1/4W

****

MISCELLANEOUS

****

* 13	1-590-499-11	WIRE, FLAT TYPE (23 CORE)			
53	1-572-291-41	SWITCH, ROTARY SLIDE			
60	1-590-033-11	WIRE, FLAT TYPE (7 CORE)			
64	1-690-970-11	WIRE (FLAT TYPE) (13 CORE)			
⚠70	1-690-609-11	CORD, POWER (US, Canadian)			
⚠71	1-696-848-21	CORD, POWER (AUS)			
72	1-575-662-11	WIRE, FLAT TYPE (5 CORE)			
⚠CNJ901	1-251-078-11	OUTLET, AC (AC OUTLET) (AUS)			
⚠F902	1-532-237-00	FUSE, TIME LAG (T3.15A/250V) (AUS)			
⚠F902	1-532-748-11	FUSE, GLASS TUBE (6.3A/125V) (US, Canadian)			
⚠F903	1-532-286-00	FUSE, TIME LAG (T2.5A/250V) (AUS)			
⚠F971	1-532-237-00	FUSE, TIME LAG (T3.15A/250V) (AUS)			
⚠F971	1-576-107-11	FUSE (3.15A/250V) (US, Canadian)			
⚠F972	1-532-237-00	FUSE, TIME LAG (T3.15A/250V) (AUS)			
⚠F972	1-576-107-11	FUSE (3.15A/250V) (US, Canadian)			
Q655	8-729-209-15	TRANSISTOR	2SD2012		
Q658	8-729-022-16	TRANSISTOR	2SD2390-OPY-M		
Q659	8-729-022-15	TRANSISTOR	2SB1560-OPY-M		
Q701	8-729-209-15	TRANSISTOR	2SD2012		
Q705	8-729-022-16	TRANSISTOR	2SD2390-OPY-M		
Q706	8-729-022-15	TRANSISTOR	2SB1560-OPY-M		
Q751	8-729-209-15	TRANSISTOR	2SD2012		
Q755	8-729-022-16	TRANSISTOR	2SD2390-OPY-M		
Q756	8-729-022-15	TRANSISTOR	2SB1560-OPY-M		
⚠T902	1-423-637-11	TRANSFORMER, POWER (US)			
⚠T902	1-423-638-11	TRANSFORMER, POWER (Canadian)			
⚠T902	1-423-639-11	TRANSFORMER, POWER (AUS)			

****

The components identified by mark ⚠ or dotted line with mark ⚠ are critical for safety. Replace only with part number specified.	Les composants identifiés par une marque ⚠ sont critiques pour la sécurité. Ne les remplacer que par une pièce portant le numéro spécifié.

Ref. No.	Part No.	Description	Remark
		ACCESSORIES & PACKING MATERIALS **********	
	1-467-033-11	COMMANDER, STANDARD (RM-P331) (D911:Canadian)	
	1-467-034-11	COMMANDER, STANDARD (RM-U231) (D711/D911:US, AUS)	
	1-501-374-11	ANTENNA, LOOP	
	3-756-703-21	MANUAL, INSTRUCTION (ENGLISH)	
	3-756-703-31	MANUAL, INSTRUCTION (FRENCH) (Canadian)	
	3-756-915-11	MANUAL (RM-P331), INSTRUCTION (ENGLISH, FRENCH) (D911:Canadian)	
	4-925-079-01	COVER (6), BATTERY	
*	4-952-676-01	CUSHION	
*	4-958-299-01	INDIVIDUAL CARTON (D911)	
*	4-958-300-01	INDIVIDUAL CARTON (D711)	

****

****
HARDWARE LIST
****

#1	7-682-548-04	SCREW +BVTT 3X8 (S)
#2	7-685-648-79	SCREW +BVTP 3X12 TYPE2 IT-3
#3	7-682-548-09	SCREW +BVTT 3X8 (S)
#4	7-685-646-79	SCREW +BVTP 3X8 TYPE2 IT-3
#5	7-682-561-04	SCREW +BVTT 4X8 (S)
#6	7-621-849-00	SCREW (BV/RING)

9-957-947-11

Sony Corporation
Audio Group

English
93E0433-1
Printed in Japan
© 1993. 5

Published by Audio Sector Quality Assurance Dept.

STR-D711/D911

SONY®
SERVICE MANUAL

US Model
Canadian Model
STR-D711/D911
Australian Model
STR-D911

SUPPLEMENT-1

File this supplement with the service manual.

BLOCK DIAGRAM

9-957-947-81

Sony Corporation
Audio Group

English
93G0434-1
Printed in Japan
© 1993. 7

Published by Audio Sector Quality Assurance Dept.

BLOCK DIAGRAM —SURROUND SECTION (D711)—

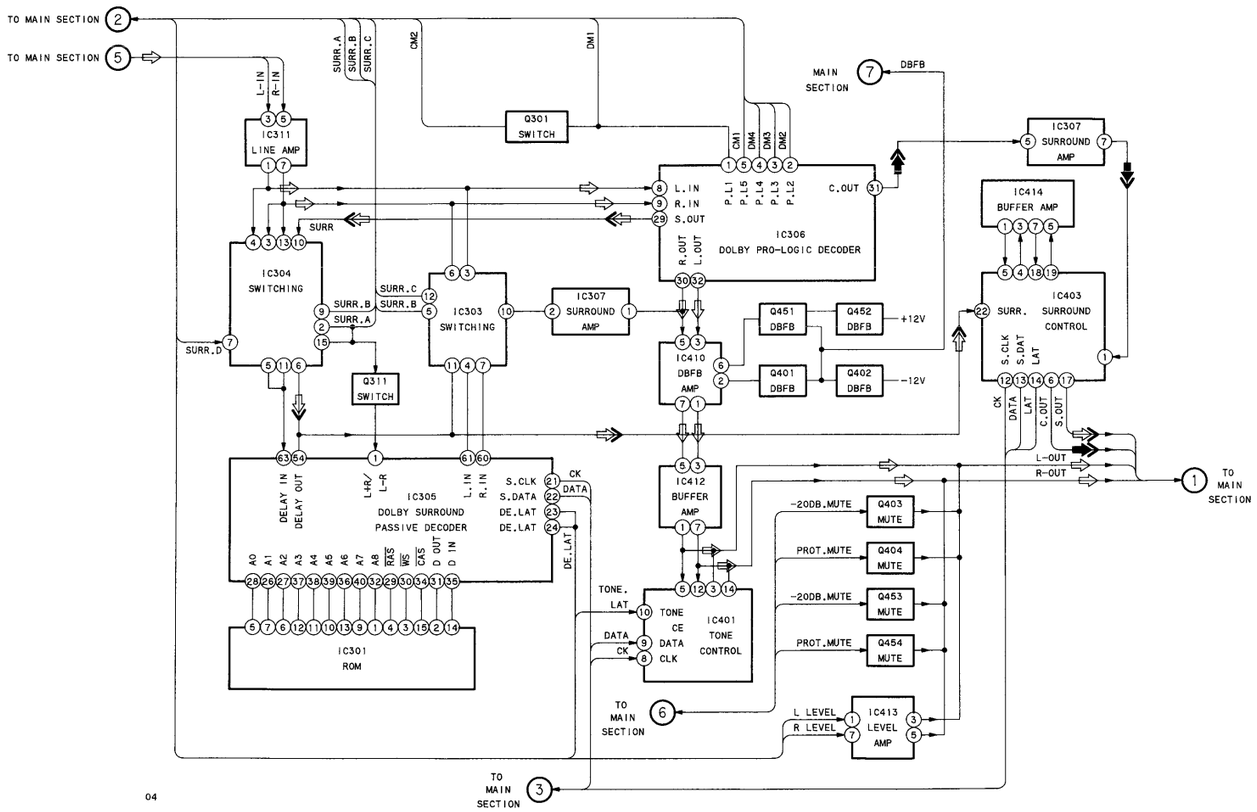

BLOCK DIAGRAM —SURROUND SECTION (D911)—

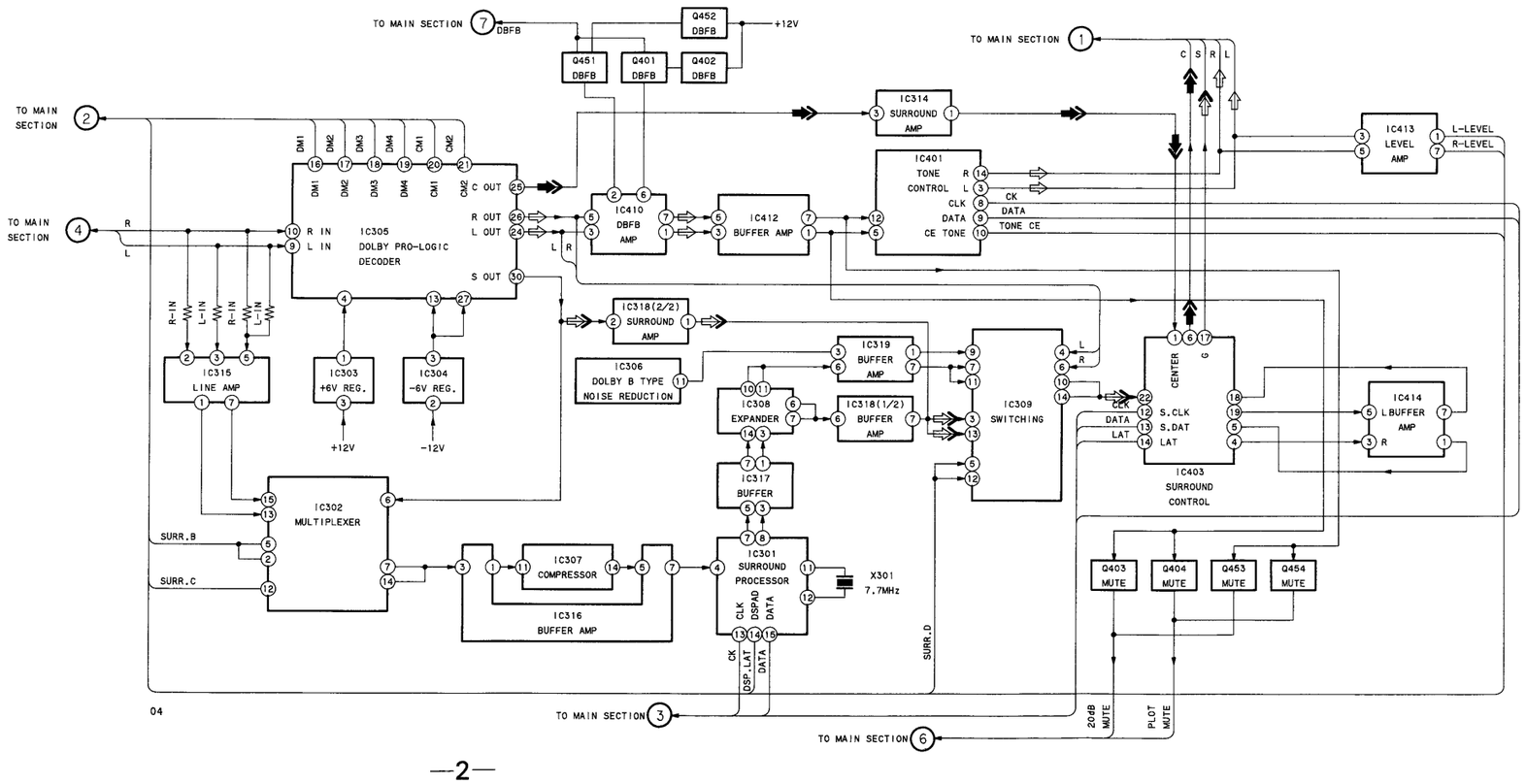
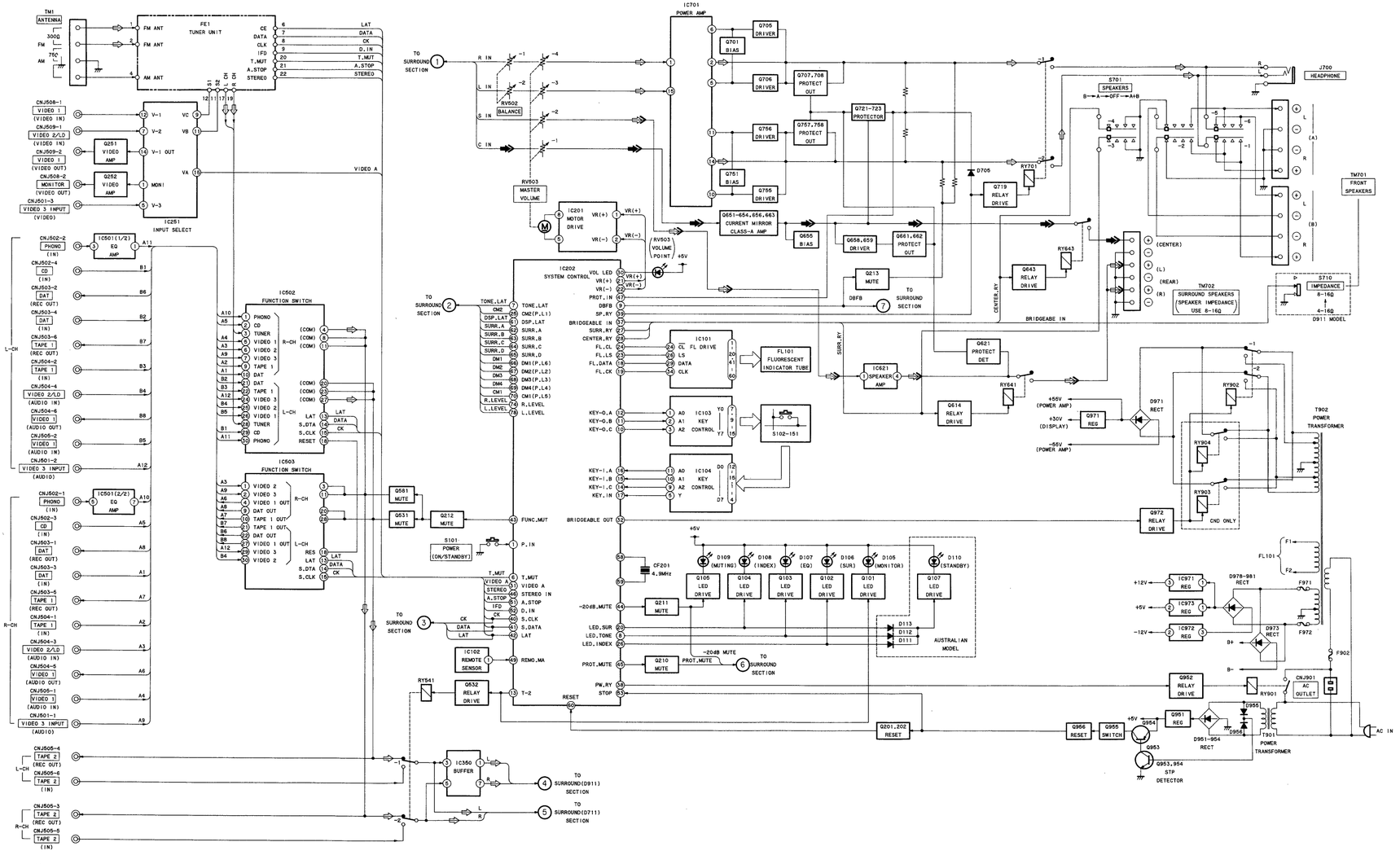
BLOCK DIAGRAM —MAIN SECTION—